Cooperation in Large Cellular Networks: Insights and Fundamental Limits

Aly El Gamal

Joint work with Yasemin Karacora, Tolunay Seyfi, Manik Singhal, Meghana Bande (Illinois), Venu Veeravalli (Illinois)

Department of Electrical and Computer Engineering
Purdue University

ITA Workshop, 02/17/17

Cloud-Based Communication

Global Knowledge / Control available at Central nodes

Cloud-Based Coordinated Multi-Point (CoMP)

Enabling centralized approaches:

1. Cell association decisions
2. Transmission schedules

Enabling CoMP Gains for Cell Edge Users

Locally Connected Interference Networks

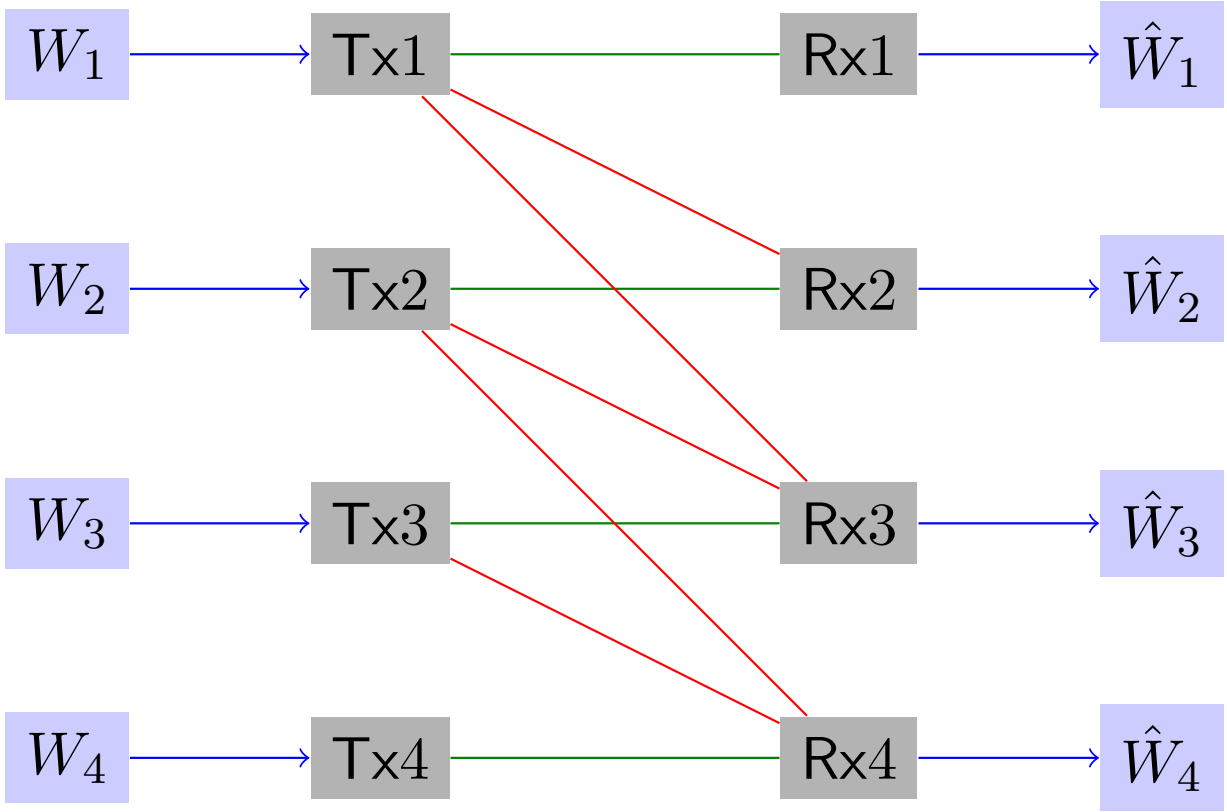

Generic Time Varying Channel

Tx i connected to Rx $\{i, i+1, \cdots, i+L\}$

Locally Connected Interference Networks

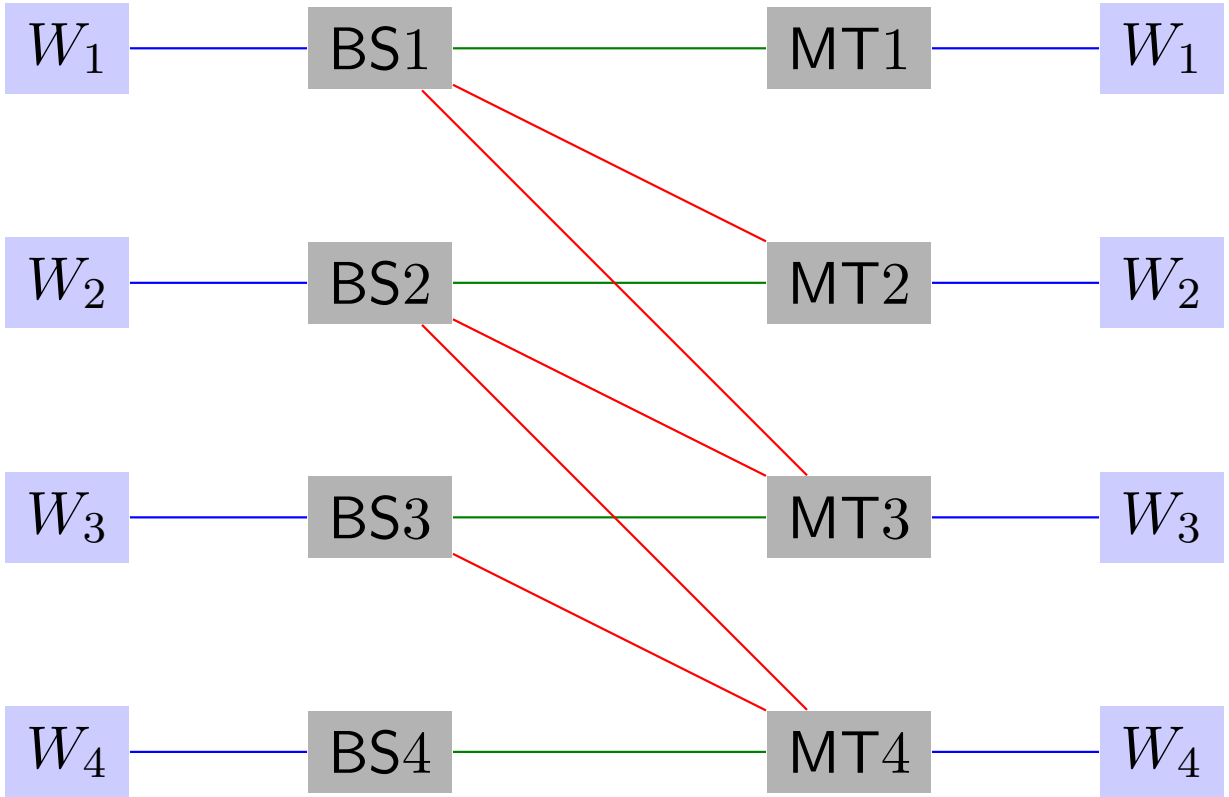

BS: Base Station

MT: Mobile Terminal

Cloud-Based Cell Associations

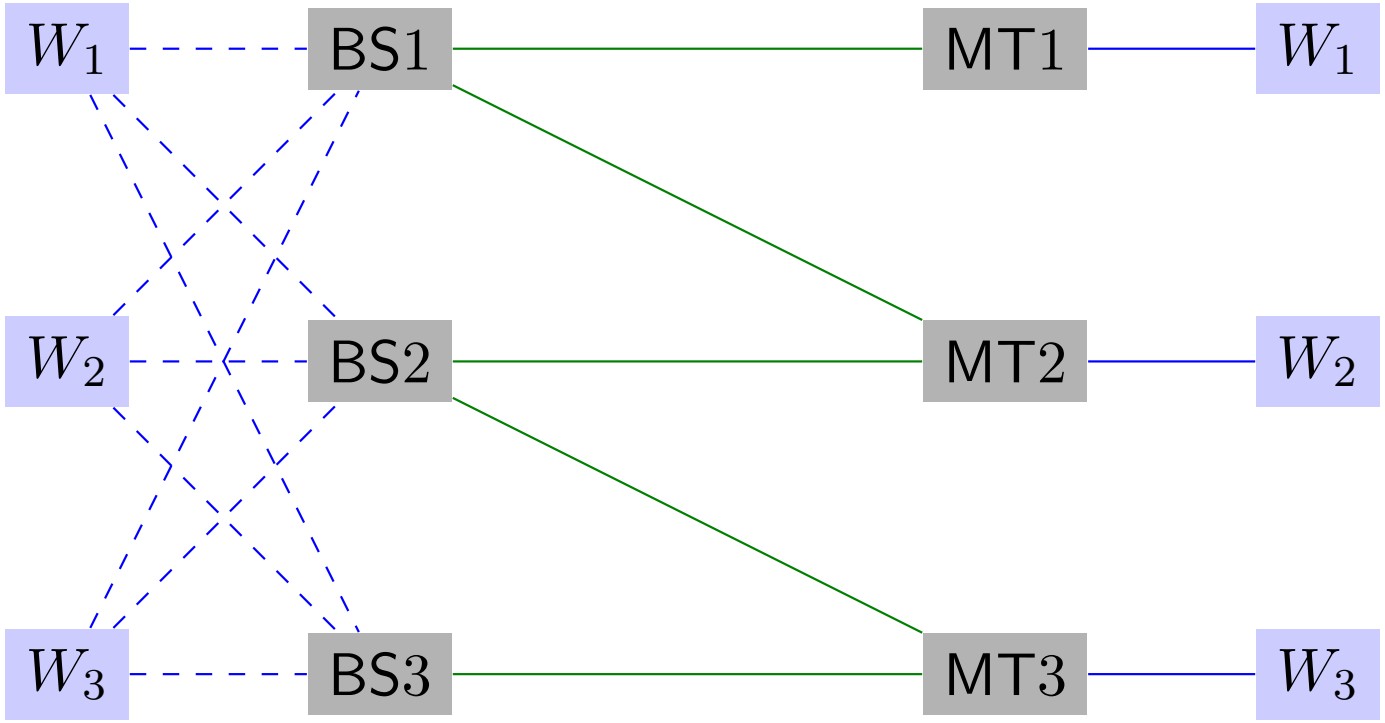

Each Mobile Terminal can be associated with N Base Stations

Degrees of Freedom (DoF)

$$\text{DoF} = \lim_{\text{SNR}\to\infty} \frac{\text{sum capacity}}{\log \text{SNR}}$$

- Objective: Determine Per User DoF as a function of N.

$$\text{PUDoF}(N) = \lim_{K\to\infty} \frac{\text{DoF}(K,N)}{K}$$

What is the optimal cell association?

Downlink: $\text{PUDoF}_D(N)$, Uplink: $\text{PUDoF}_U(N)$

Average: $\text{PUDoF}_{UD}(N)$

Justifying Choices: Network Topology

Local Connectivity:

- Reflects path loss
- Simplifies problem, only consider local cooperation

Large Networks:

- Understand scalability
- Derive insights

Solutions generalize to cellular network models

Justifying Choices: Network Topology

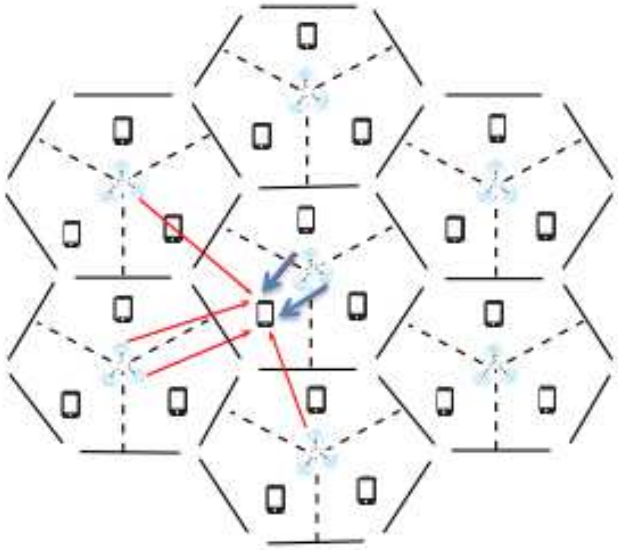

(a)

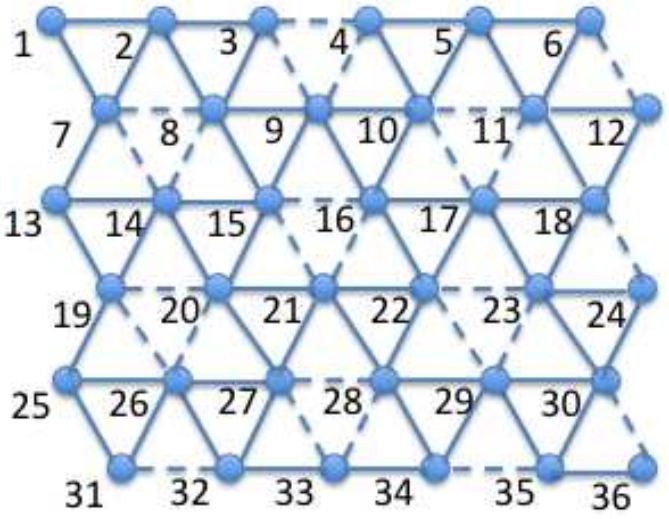

(b)

Cellular Network Model

Justifying Choices: Network Topology

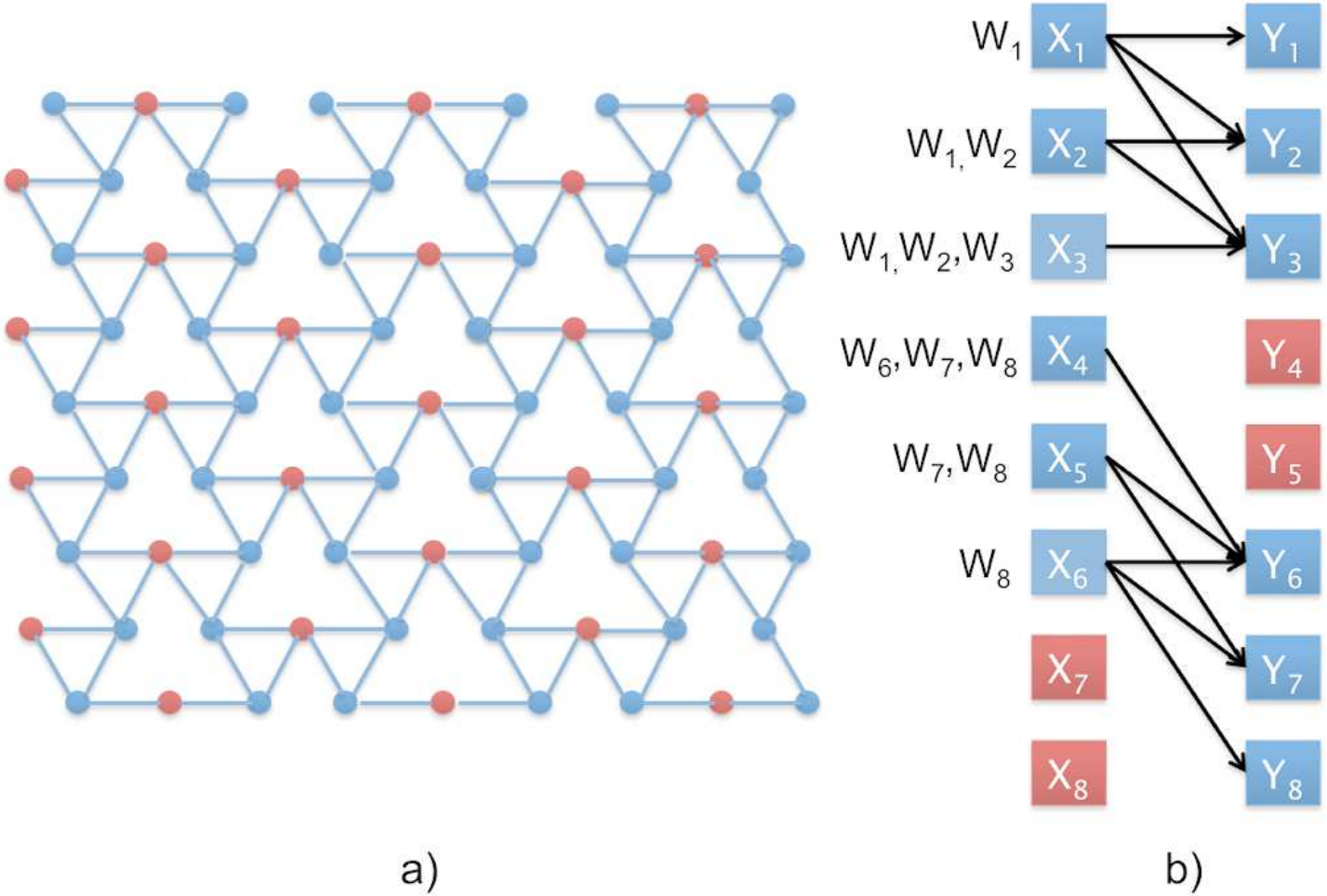

Solutions for $L = 2$ are applicable

Justifying Choices: Cooperation Constraint

Modelling a limited capacity backhaul:

- Each mobile terminal can be associated with N base stations
- Associations reflect the allocation of messages to transmitters in the downlink
- In uplink, associations allow base stations to decode the mobile terminal's message

Digital Backhaul in both Uplink and Downlink

Solutions can generalize to more practical constraints

Justifying Choices: Degrees of Freedom

Advantages:

1. Simplicity
2. Captures the interference effect (without noise)
3. Highlights the *combinatorial* part of the problem

Drawbacks:

1. Insensitive to Gaussian noise
2. Insensitive to varying channel strengths

Results: Downlink

Using One-Shot Zero-Forcing:

$$\mathsf{PUDoF}_D^{\mathsf{ZF}}(N) = \frac{2N}{2N+L}$$

$$\geq \tfrac{1}{2}, \forall N \geq \tfrac{L}{2}$$

Optimal for $L = 1$

Assigining W_i to Tx $\{i, i+1, \cdots, i+N-1\} \Rightarrow \frac{N}{N+L}$

Results: Downlink

Average Backhaul Load B (Associations per message):

$$\mathsf{PUDoF}_D^{\mathsf{ZF}}(B, L=1) = \mathsf{PUDoF}_D(B, L=1) = \frac{4B-1}{4B}$$

Compare to $\frac{2N}{2N+1}$

Can achieve $\frac{1}{2}$ using zero-forcing and $B = 1$ for $L \leq 6$

Achieved using convex combination of $N = 2B$ and $N = 2B - 1$

Uplink: Achieving Full DoF

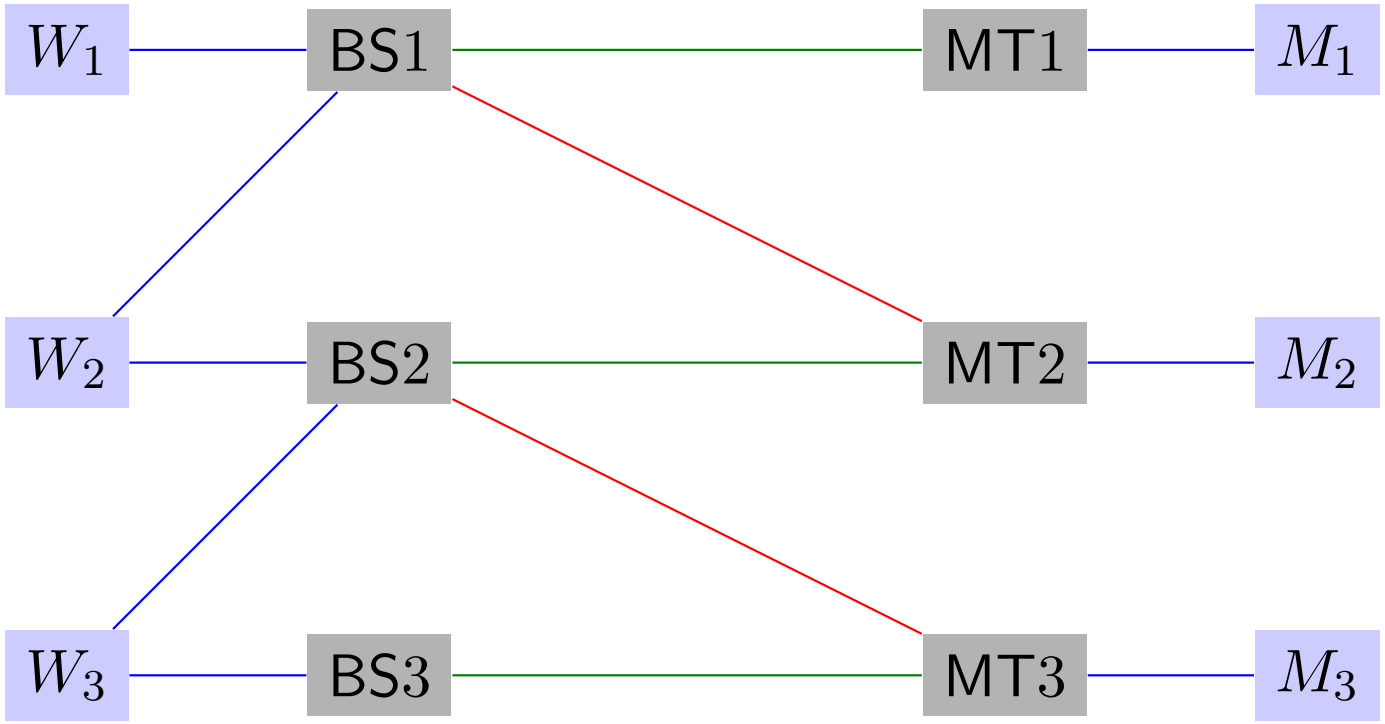

Associating each MT with two BSs connected to it

Message Passing Decoding: Interference-free Degrees of Freedom

Results: Uplink[1]

$$\mathsf{PUDoF}_U^{\mathrm{ZF}}(N) \geq \begin{cases} 1 & L+1 \leq N \\ \frac{N+1}{L+2} & \frac{L}{2} \leq N \leq L \\ \frac{2N}{2N+L} & 1 \leq N \leq \frac{L}{2} - 1 \end{cases}$$

$$\geq \frac{1}{2}, \forall N \geq \frac{L}{2}$$

Higher than Downlink

Is Cooperation useful for $N < \frac{L}{2}$?

[1] M. Singhal, A. El Gamal, "Joint Uplink-Downlink Cell Associations for Interference Networks with Local Connectivity," submitted to ISIT '17

Average Uplink-Downlink DoF

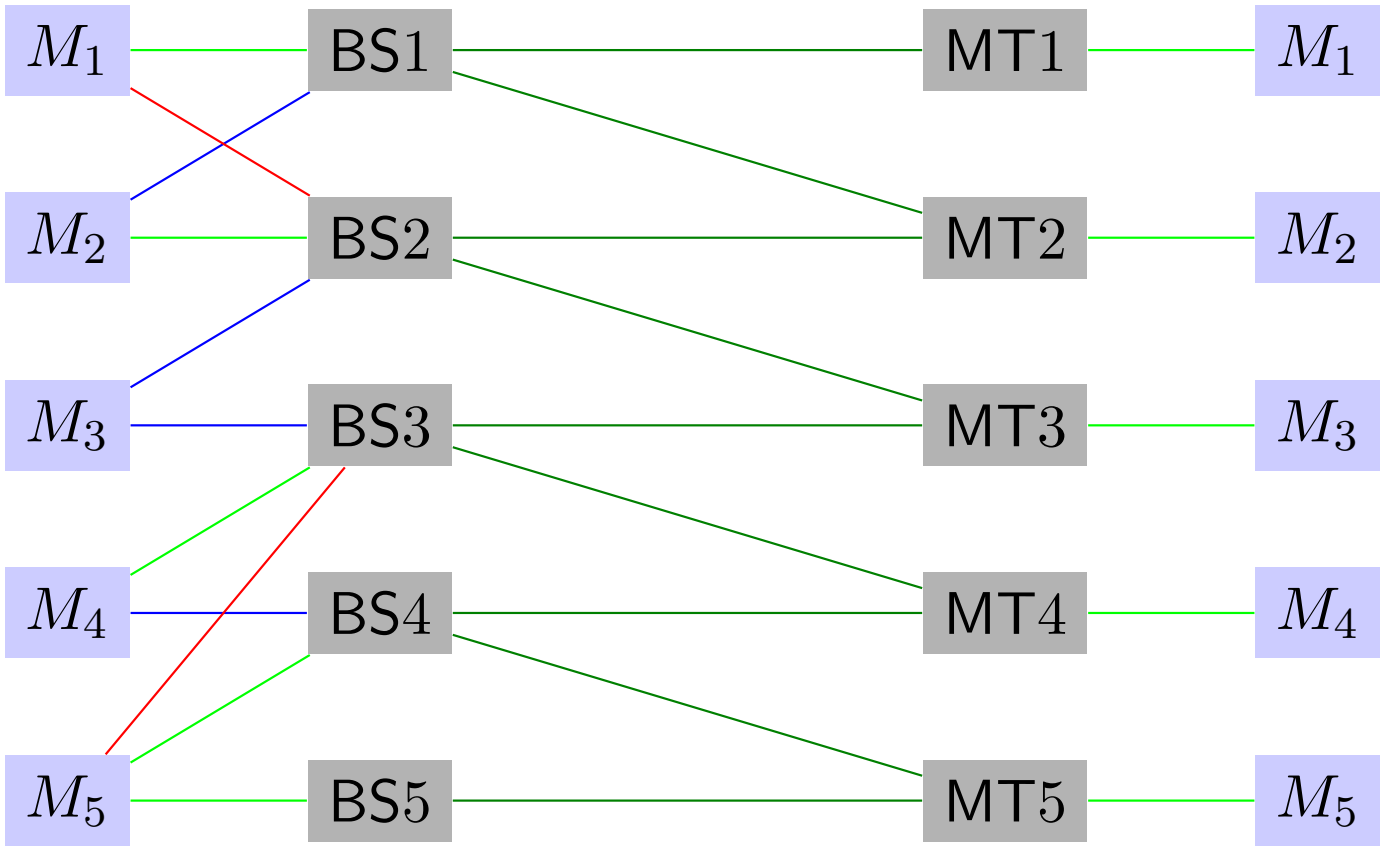

Downlink Associations Uplink Associations

$N = 3$ PUDoF $= \frac{1+\frac{4}{5}}{2} = \frac{9}{10}$

Average Uplink-Downlink DoF

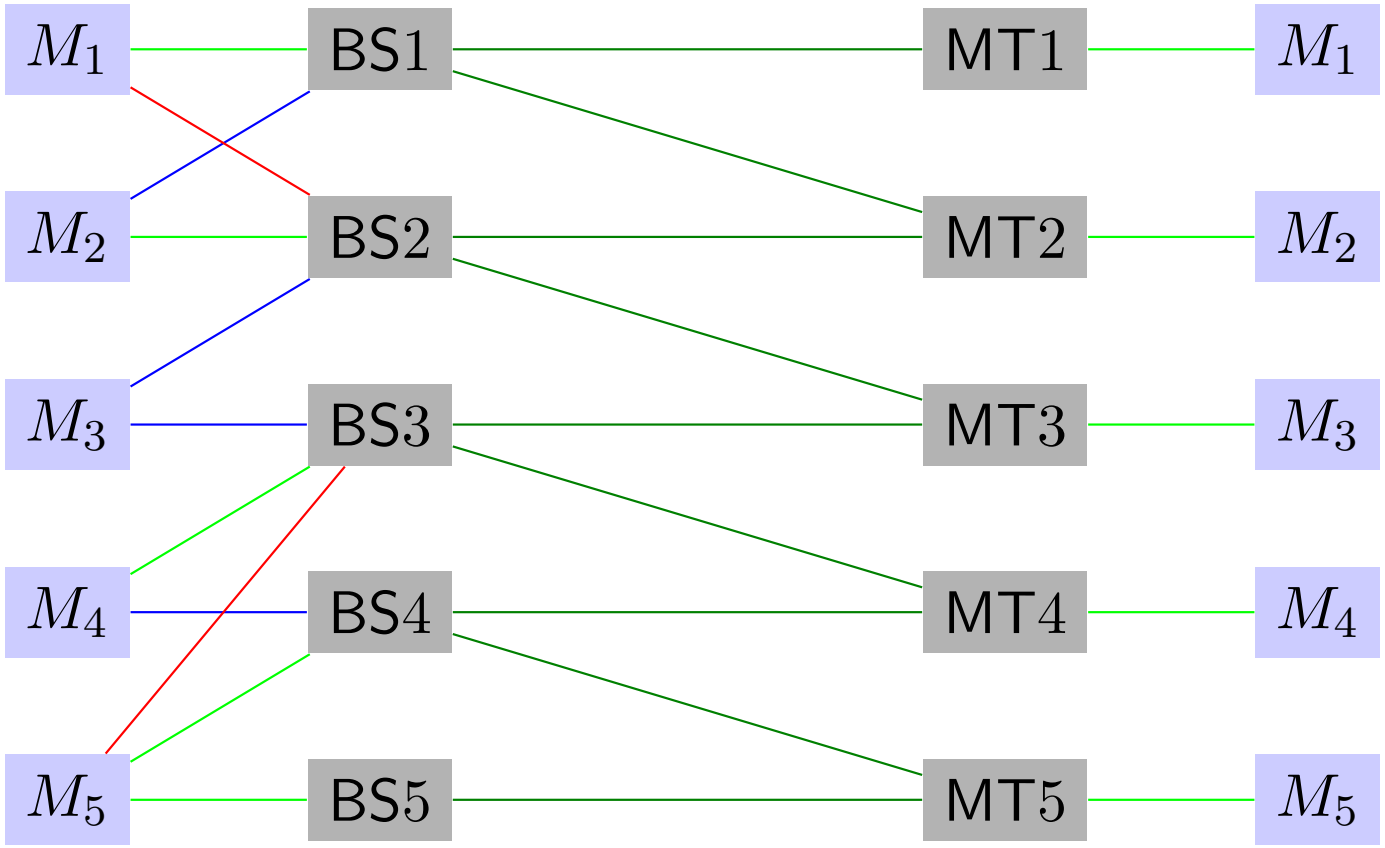

$$\text{PUDoF}_{UD}(N, L = 1) = \frac{4N-3}{4N-2}$$

Average Uplink-Downlink DoF

For $L \geq 2$:

$$\text{PUDoF}_{UD}^{\text{ZF}}(N) \geq \begin{cases} \frac{1}{2}\left(1 + \left(\frac{\lceil \frac{L}{2} \rceil + \delta + N - (L+1)}{N}\right)\right) & L+1 \leq N \\ \frac{2N}{2N+L} & 1 \leq N \leq L \end{cases}$$

where $\delta = (L+1) \bmod 2$.

For $L+1 \leq N$, scheme is different from both downlink and uplink

Further Questions

1. General network topologies
2. When to simplify into optimizing for uplink / downlink only
3. Constrain average number of cell associations

Deep Fading Block Erasures[2]

Communication takes place over blocks of time slots.

- Link block erasure probability p (long-term fluctuations).
- Non-erased links are generic (short-term fluctuations).

Maximize average performance

[2] A. El Gamal, V. Veeravalli, "Dynamic Interference Management," Asilomar '13

Dynamic Linear Interference Network

Tx i can only be connected to receivers $\{i, i+1\}$

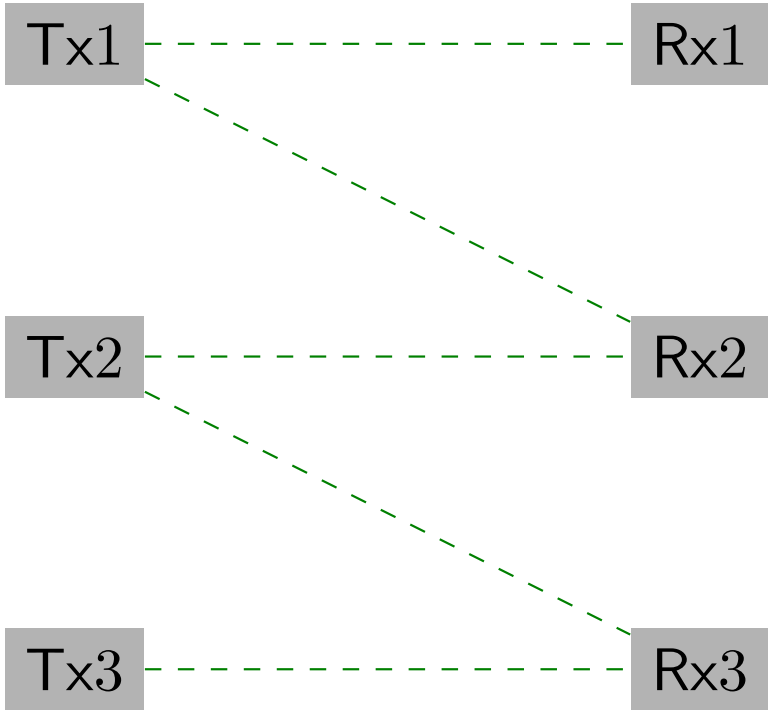

Each of the dashed links can be erased with probability p

Average Degrees of Freedom (DoF)

$$\text{DoF} = \lim_{\text{SNR}\to\infty} \frac{\text{sum capacity}}{\log \text{SNR}}$$

$$\text{PUDoF}(N) = \lim_{K\to\infty} \frac{\text{DoF}(K,N)}{K}$$

- For dynamic topology: PUDoF is a function of p and N

$$\text{PUDoF}(p,N) = \mathbb{E}_p\left[\text{PUDoF}(N)\right]$$

Cell Association ($N = 1$)

Theorem

For the Cell Association problem in dynamic Wyner's linear model,

$$\text{PUDoF}(\text{p}, \text{N} = 1) = \max\left\{\text{PUDoF}^{(1)}(p), \text{PUDoF}^{(2)}(p), \text{PUDoF}^{(3)}(p)\right\}$$

$\text{PUDoF}^{(1)}(p)$: Optimal at high values of p

$\text{PUDoF}^{(2)}(p)$: Optimal at low values of p

$\text{PUDoF}^{(3)}(p)$: Optimal at middle values of p

Achievable through TDMA

Cell Association ($N = 1$): High Erasure Probability

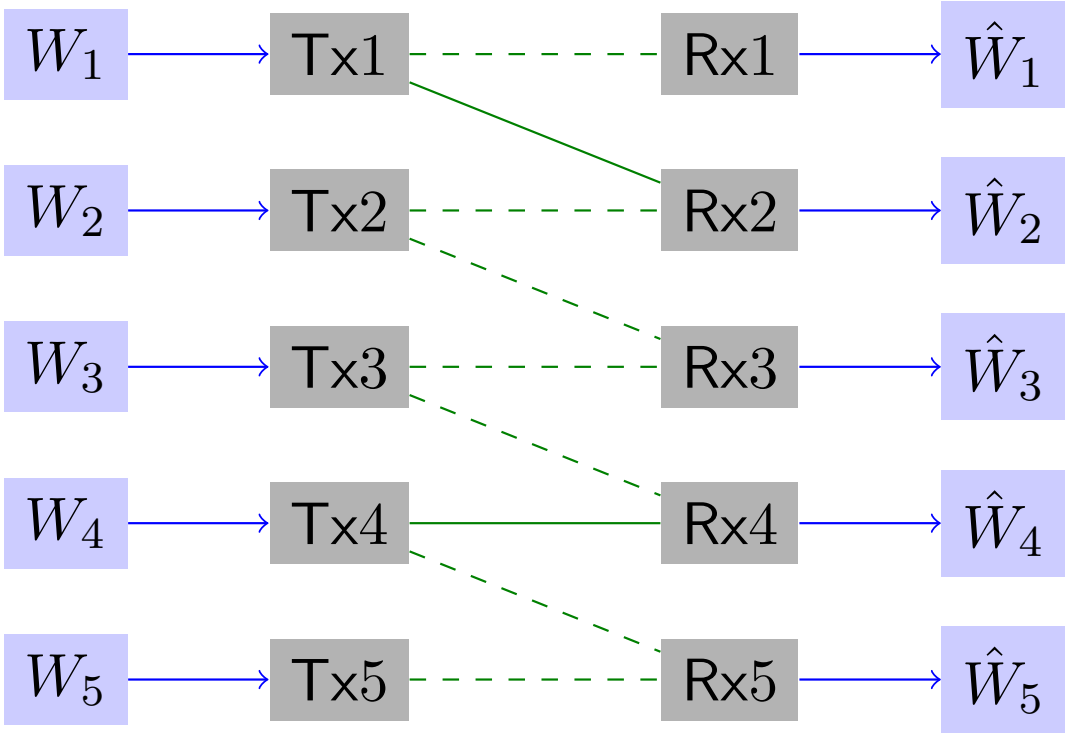

Maximize probability of message delivery

Cell Association ($N = 1$): Low Erasure Probability

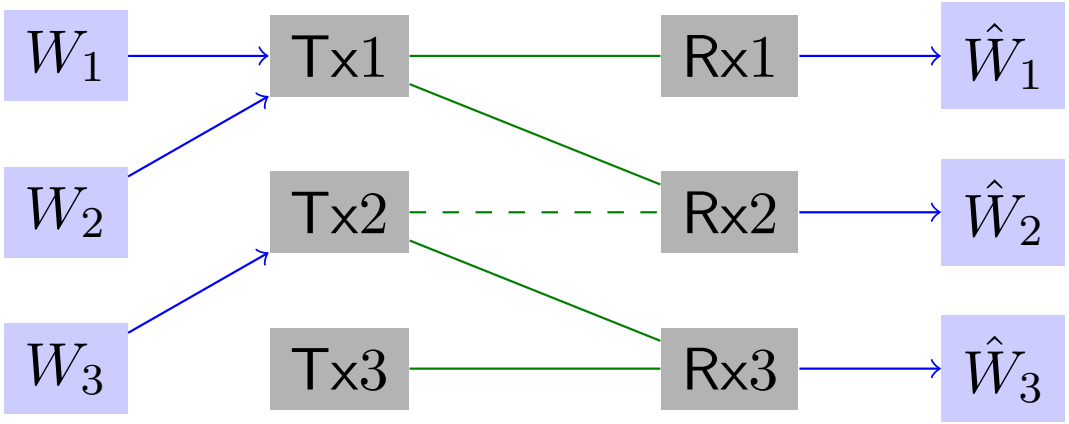

Avoiding Interference

Cell Association ($N = 1$): Low Erasure Probability

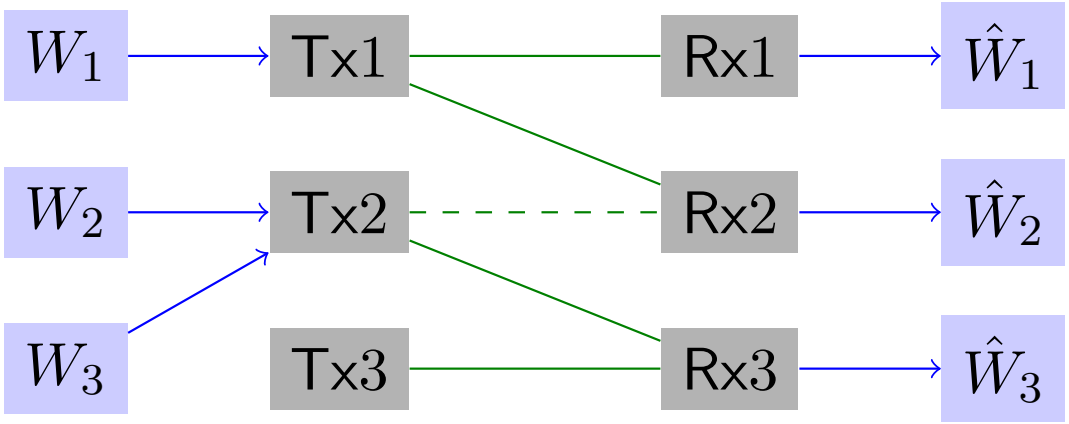

Avoiding Interference

Cell Association ($N = 1$)

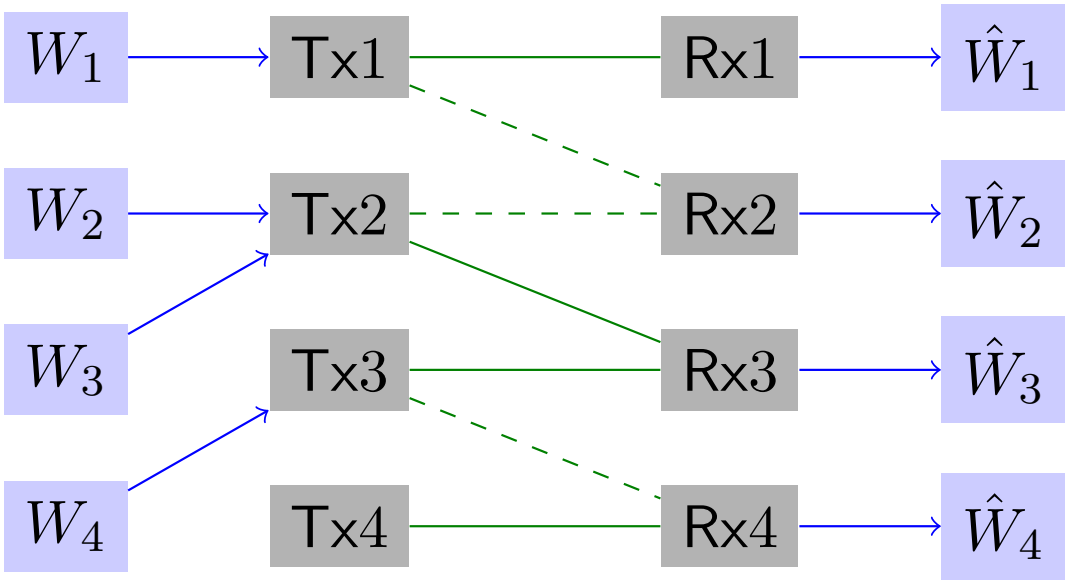

Optimal at middle values of p

Cell Association $(N = 2)$[3]

1. Identified optimal zero-forcing associations
2. As p goes from 1 to 0, role of cooperation shifts to interference management
3. As p goes from 0 to 1, role of cooperation shifts to coverage extension

Knowledge of p is necessary

Needed level of accuracy?

[3] Y. Karacora, T. Seyfi, A. El Gamal, "The Role of Transmitter Cooperation in Linear Interference Networks with Block Erasures," submitted to ISIT '17

Conclusions

Cloud-Based Wireless Networks:

- Enabling centralized approaches
- new questions and conclusions
- Value of flexible cell association
- Significant CoMP gains
- Learning network topology?
- Benefit with no CSIT / Ad-hoc networks?

We are writing a book!

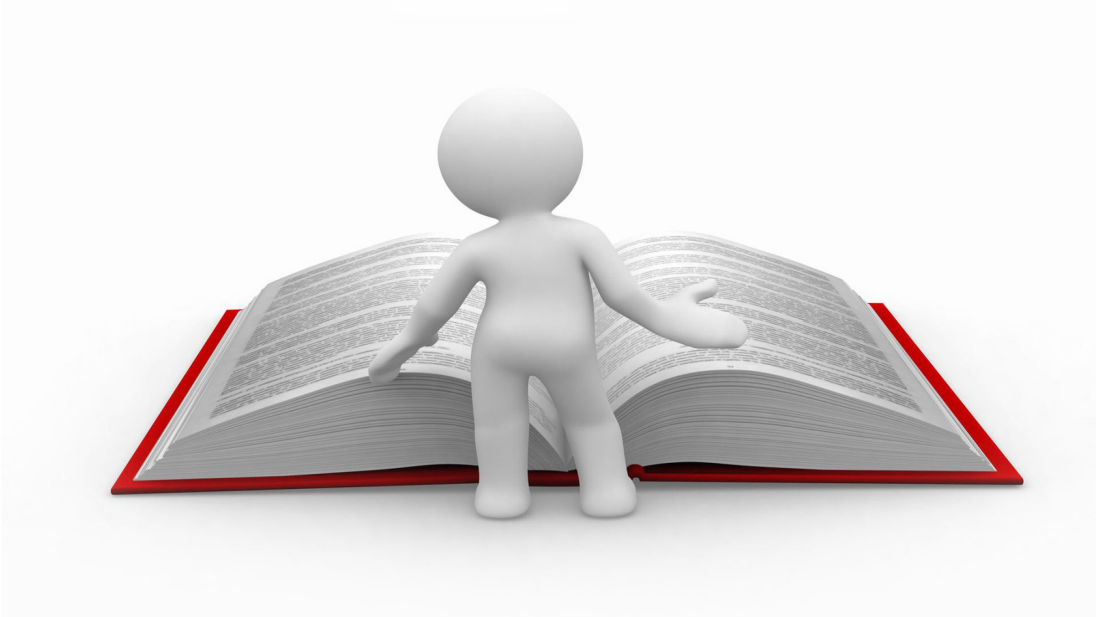

V. V. Veeravalli, A. El Gamal "Interference Management in Wireless Networks: Fundamental Bounds and The Role of Cooperation", Cambridge University Press, 2017