ECE 201, Section 3
Lecture 37

Prof. Peter Bermel

November 28, 2012

Average Power for SSS

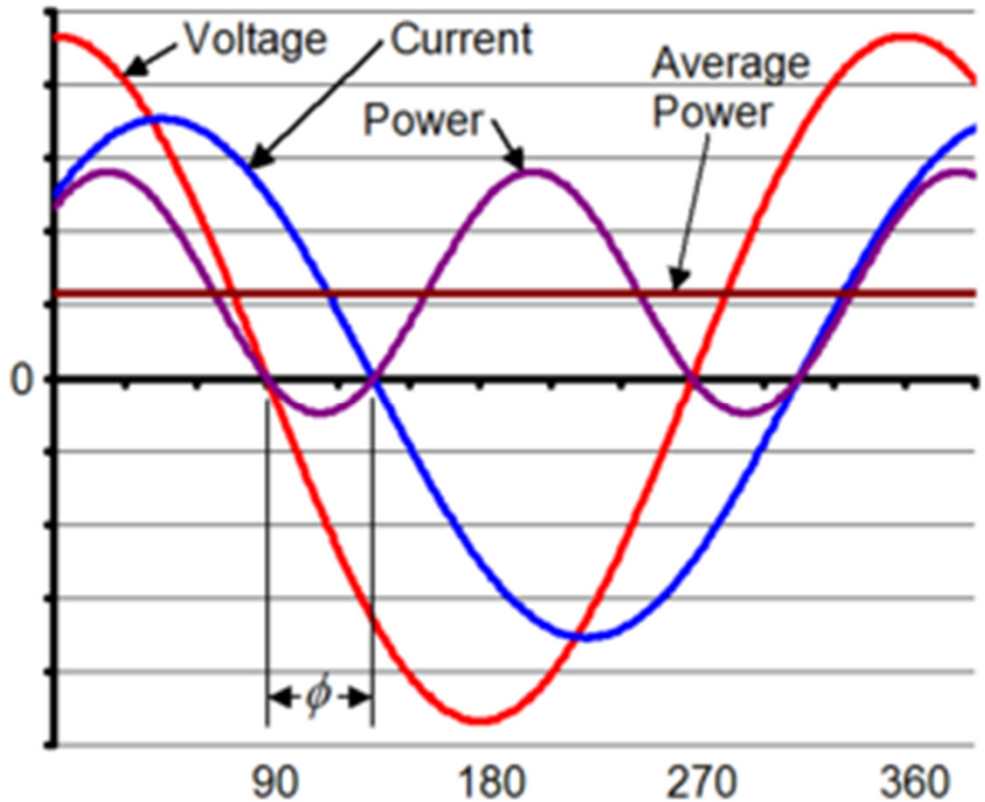

Over half-integer periods, only the first term contributes, so that:

$$P_{ave} = IV \cos \phi$$

Complex Power

- Complex power is defined as:

$$\boldsymbol{S} = \boldsymbol{I}^{*}\boldsymbol{V}$$

- For AC signals:

$$\boldsymbol{S} = Ie^{-j\omega t}Ve^{j(\omega t+\phi)}$$

$$\boldsymbol{S} = IVe^{j\phi} = IV(\cos\phi + j\sin\phi)$$

- Key definitions:
  - Re S – average power
  - Im S – reactive power
  - |S| – complex power

Complex Power Example #1

- Find the complex power and its components at the load in this circuit

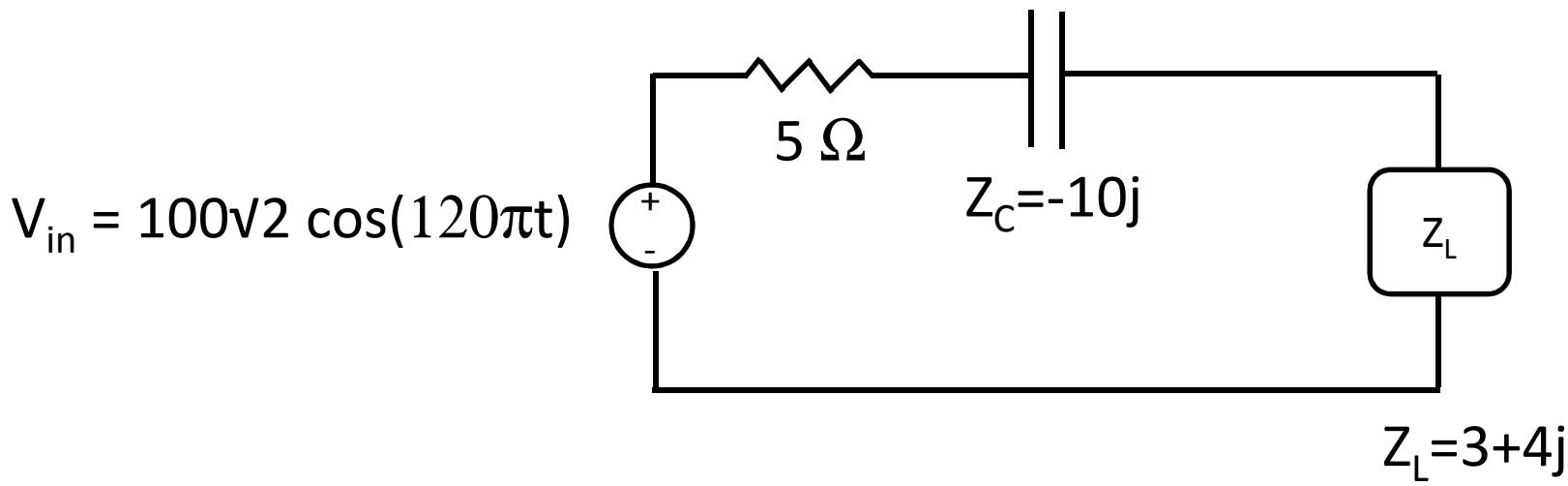

Solution

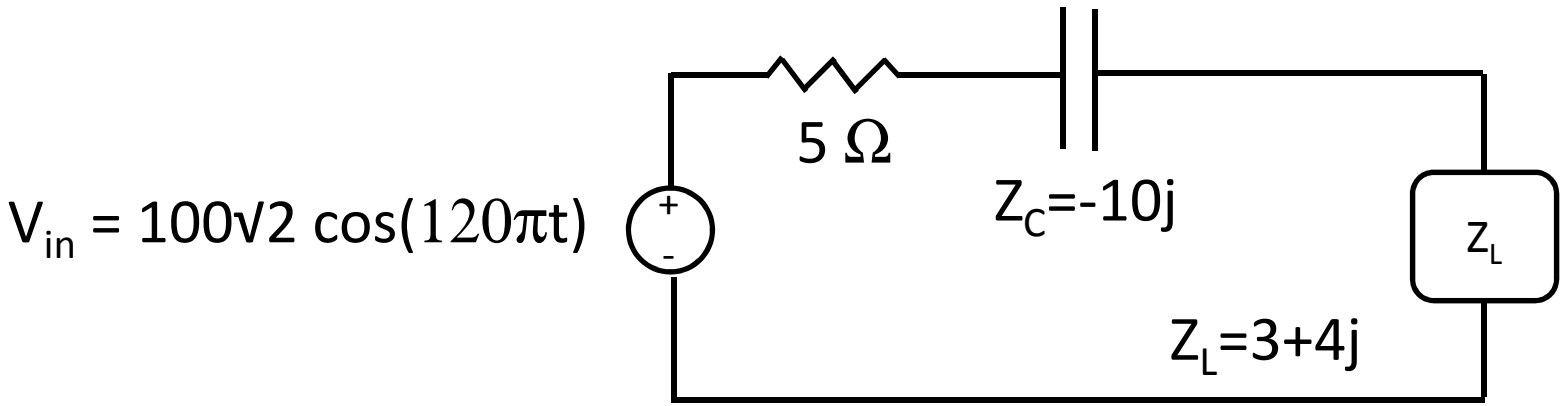

- Using Ohm's law for phasors:

$$I = \frac{V_{in}}{Z_{eq}} = \frac{100\sqrt{2}e^{j120\pi t}}{5 - 10j + 3 + 4j} = \frac{100\sqrt{2}e^{j120\pi t}}{8 - 6j}$$

$$I = 10\sqrt{2}e^{j(120\pi t + 37°)}$$

Solution

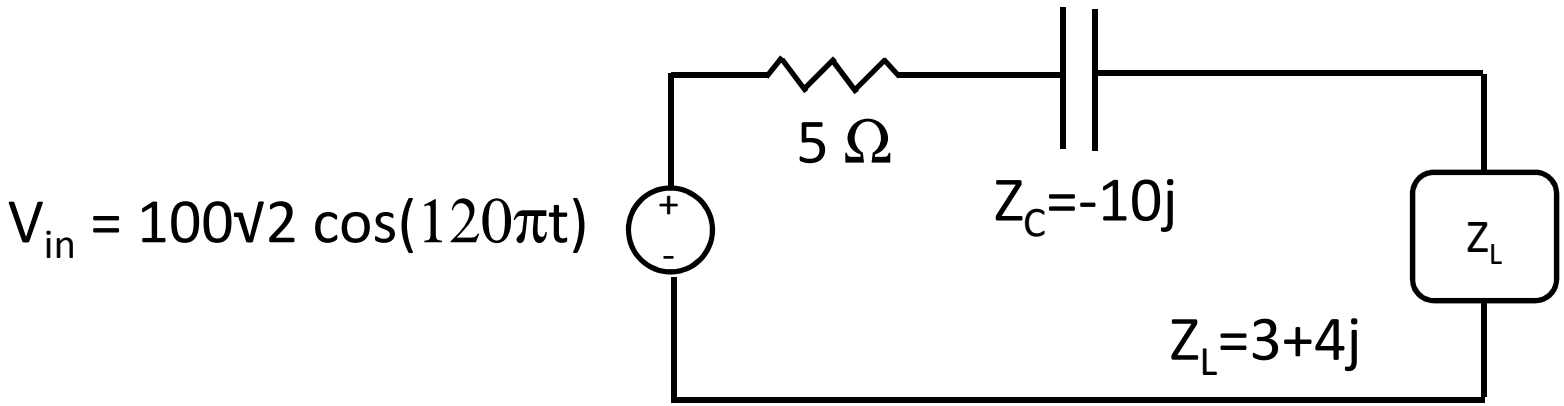

- Using voltage division for phasors:

$$V_L = \frac{Z_L}{Z_{eq}} V_{in} = \frac{3+4j}{8-6j} 100\sqrt{2} e^{j120\pi t}$$

$$V_L = 50\sqrt{2} e^{j(120\pi t + 90°)}$$

Solution

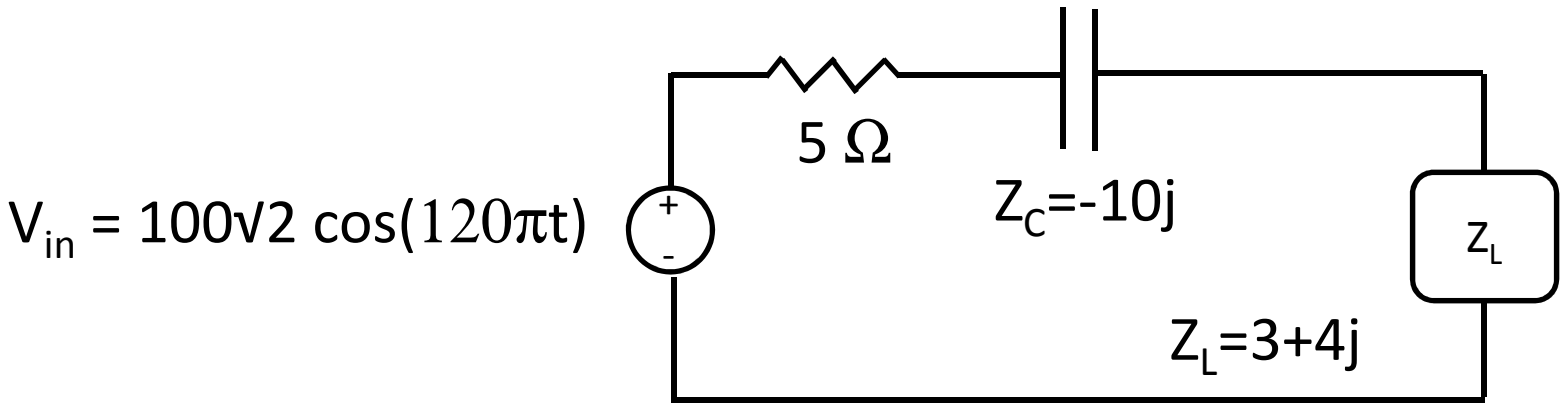

- Putting those results together:

$$S_L = I_{L,eff}^{*} V_{L,eff}$$

$$S_L = 10e^{-j(120\pi t+37°)}50e^{j(120\pi t+90°)}$$

$$S_L = 500e^{j53°} = 300 + 400j$$

Complex Power Example #2

- What is the current and complex power for the inductor contained within this circuit?

$V_{in} = 6 \cos(\omega t)$

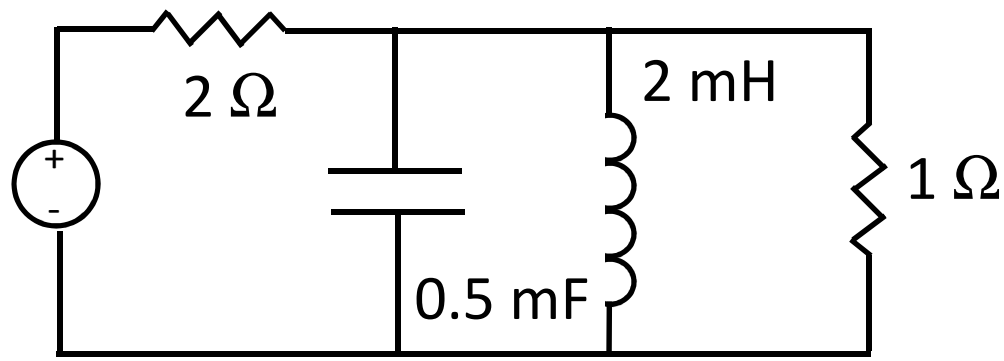

Complex Power: Solution

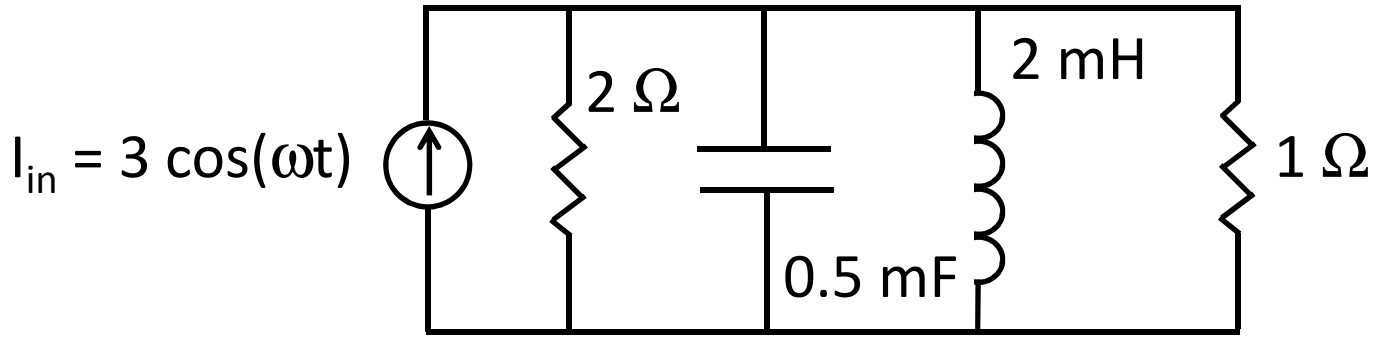

- The impedance is given by:

$$Z = \left[\frac{3}{2} + j\omega \cdot 5 \cdot 10^{-4} + \frac{1}{j\omega \cdot 2 \cdot 10^{-3}}\right]^{-1}$$

- The voltage drop is thus given by:

$$V = IZ = \frac{3e^{j\omega t}}{\frac{3}{2} + j \cdot (\omega/2000 - 500/\omega)}$$

$$V = \frac{2e^{j\left[\omega t - \tan^{-1}\left(\frac{\omega}{3000} - \frac{1000}{3\omega}\right)\right]}}{\left[1 + \left(\frac{\omega}{3000} - \frac{1000}{3\omega}\right)^2\right]^{1/2}}$$

Complex Power: Solution

- Applying the current division rule:

$$I_L = \frac{Y_L}{Y} I_{tot}$$

$$I_L = \frac{(500/j\omega)3e^{j\omega t}}{\frac{3}{2} + j \cdot (\omega/2000 - 500/\omega)} = \frac{1000e^{j\omega t}}{j\omega + \frac{1000}{3} - \frac{\omega^2}{3000}}$$

$$I_L = \frac{1000e^{j[\omega t - \tan^{-1}(\omega/(333-\omega^2/3000)]}}{\left[\omega^2 + \left(\frac{1000}{3} - \frac{\omega^2}{3000}\right)^2\right]^{1/2}}$$

Solution

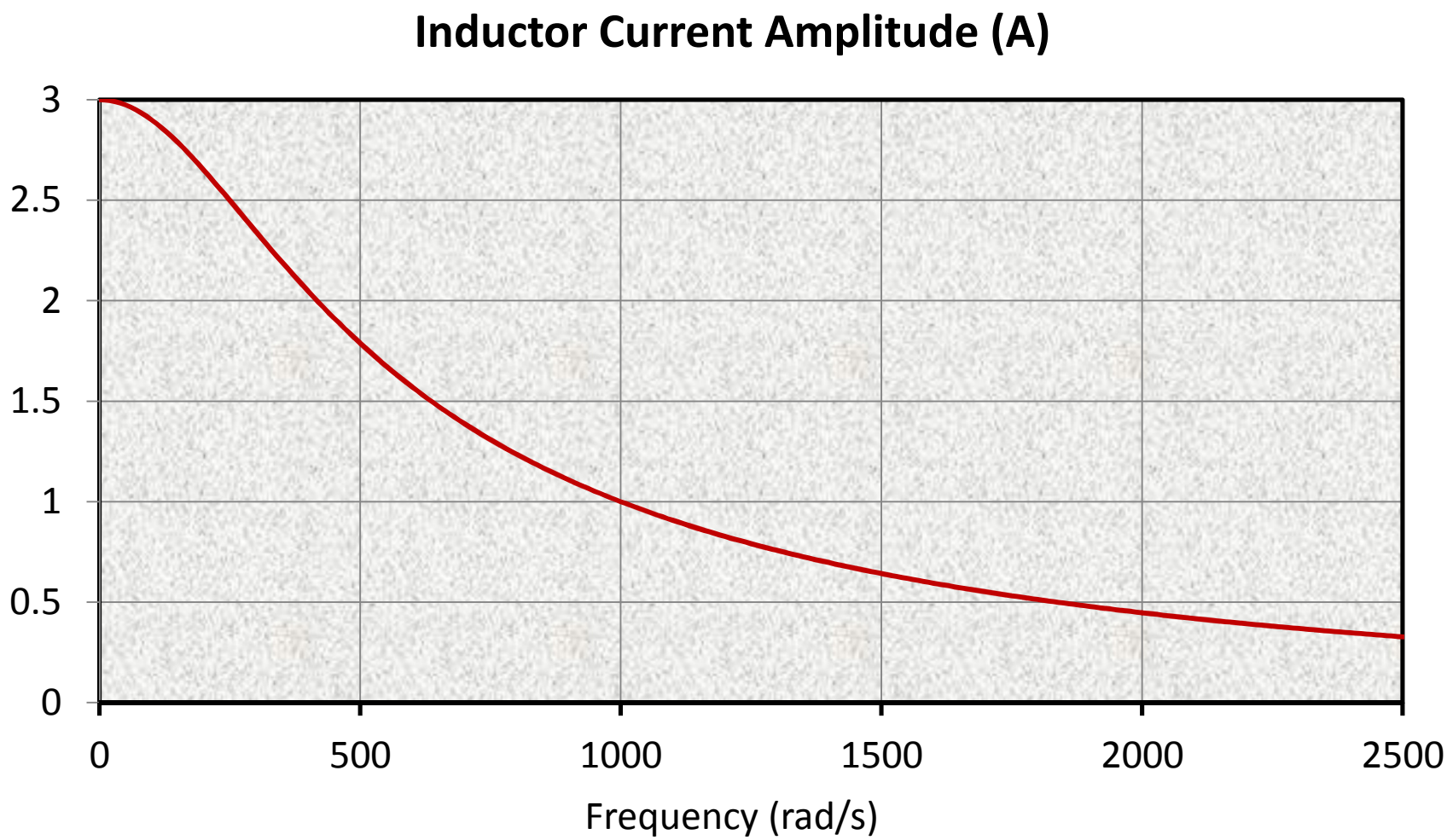
Inductor Current Amplitude (A)
3
2.5
2
1.5
1
0.5
0
0
500
1000
1500
2000
2500
Frequency (rad/s)

Complex Power: Solution

- From our earlier definitions:

$$\boldsymbol{S_L} = \boldsymbol{I}_{L,\overset{*}{eff}}\,\boldsymbol{V}_{L,eff}$$

- Substitution yields:

$$\boldsymbol{S} = \frac{1000e^{-j[\omega t - \tan^{-1}(\omega/(333-\omega^2/3000)]}}{\left[\omega^2 + \left(\frac{1000}{3} - \frac{\omega^2}{3000}\right)^2\right]^{1/2}} \cdot 6e^{j\omega t}$$

$$\boldsymbol{S} = 6000 \cdot \frac{333 - \frac{\omega^2}{3000} + j\omega}{\left[\omega^2 + \left(\frac{1000}{3} - \frac{\omega^2}{3000}\right)^2\right]^{3/2}}$$

Solution

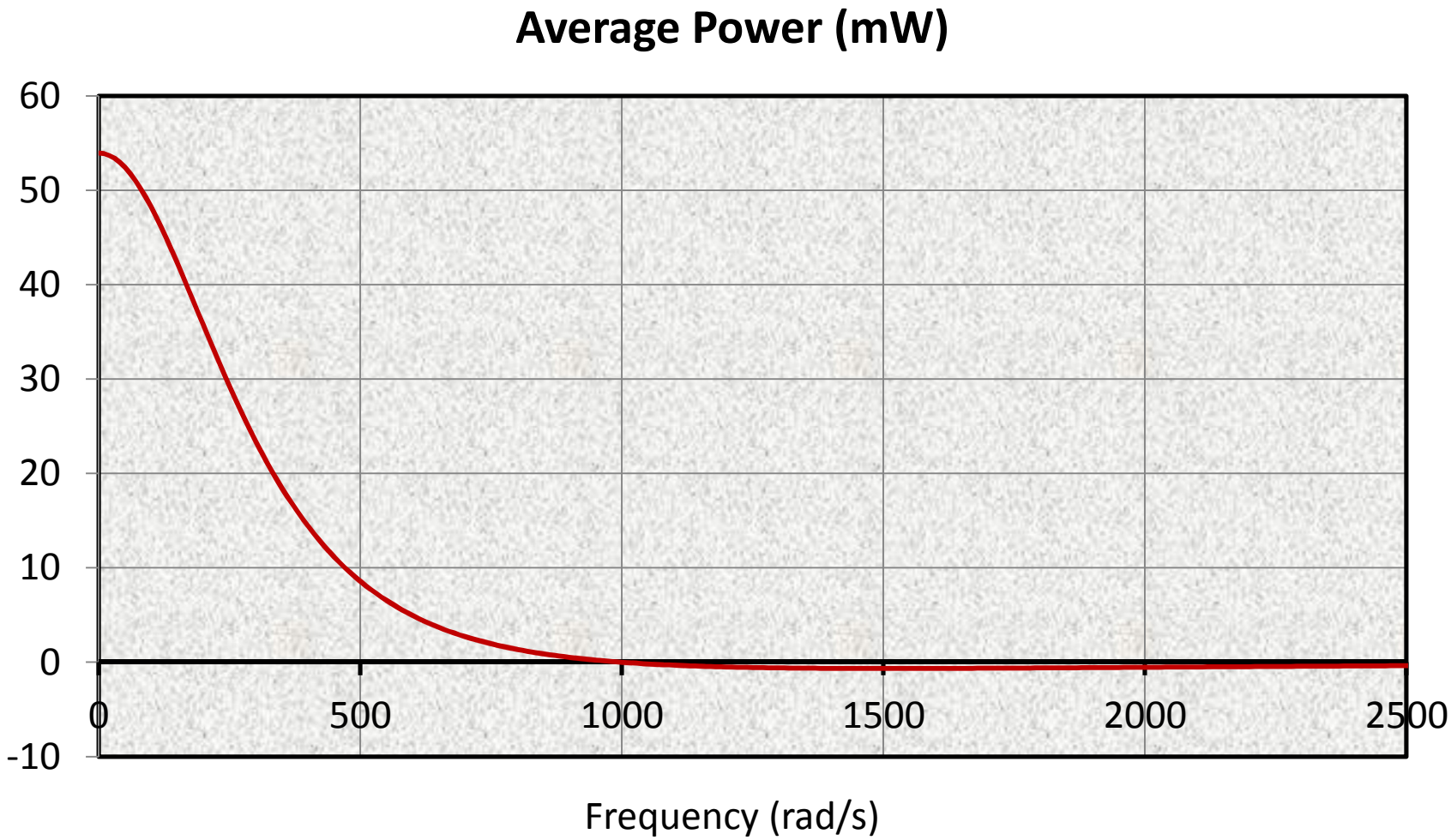
Average Power (mW)
60
50
40
30
20
10
0
-10
0
500
1000
1500
2000
2500
Frequency (rad/s)

Conservation of Complex Power

- In SSS circuits, complex power is conserved:
  - Average power generated = average power dissipated
  - Reactive power accumulated = reactive power spent
- Direct extension of previous power conservation law
- Implies conservation of energy, as well

Example

- What complex power and current is supplied by this voltage source V_s?

$V_s = 6\cos(120\pi t)$

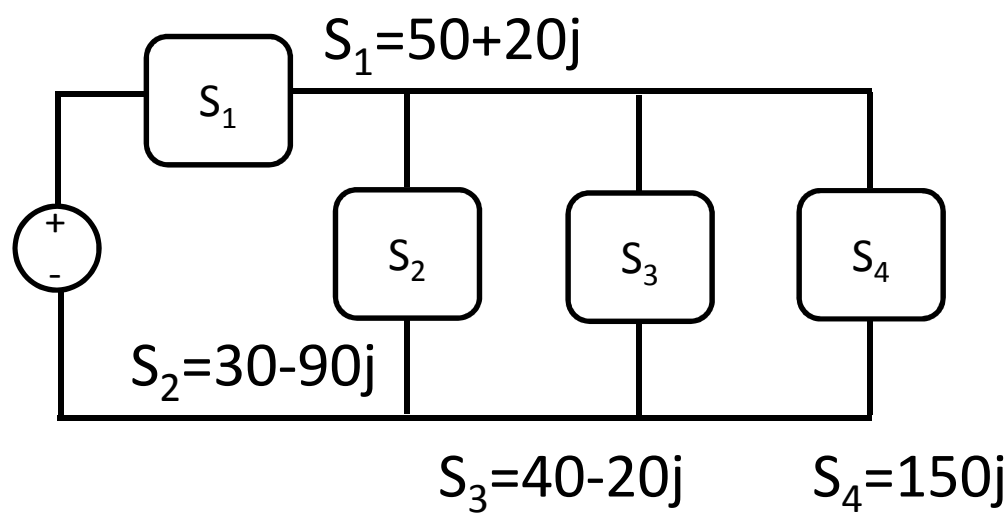

Solution

$V_s = 6\cos(120\pi t)$

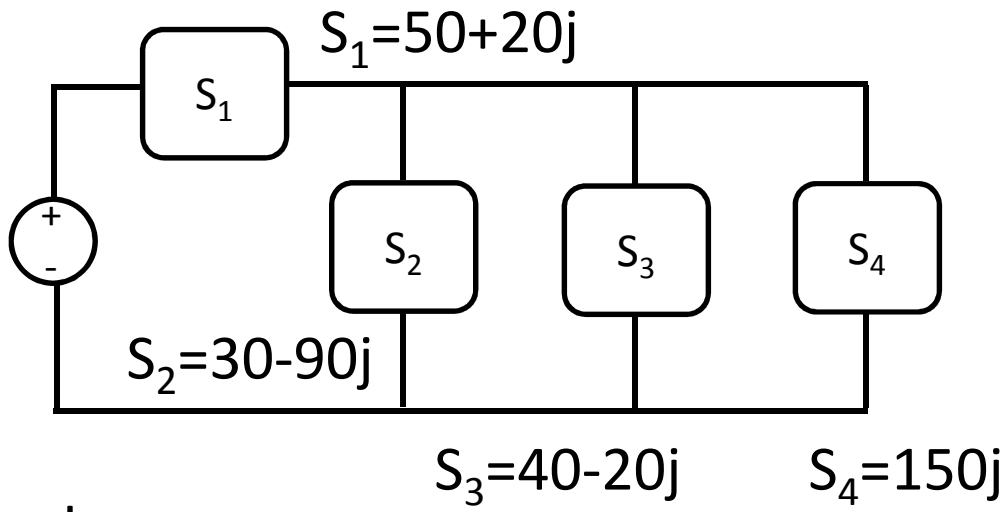

By conservation of complex power:

$$\boldsymbol{S}_v + \boldsymbol{S}_1 + \boldsymbol{S}_2 + \boldsymbol{S}_3 + \boldsymbol{S}_4 = 0$$

$$\boldsymbol{S}_v = -[50 + 20j + 30 - 90j + 40 - 20j + 150j]$$

$$\boldsymbol{S}_v = -120 - 60j$$

$$I^* = \frac{\boldsymbol{S}_v}{V_{eff}} = -20 - 10j$$

Power Factor

- Power factor is given by:

$$pf = \frac{P_{ave}}{|\boldsymbol{S}|}$$

- For AC circuits in SSS:

$$pf = \cos\phi$$

- Usually give values like 0.9, lagging (for circuits with finite inductance)

Power Factor Values

Type of Load	Power factor (lagging)
Incandescent lighting	1.0
Fluorescent lighting (with ballast)	0.93
One-phase arc welder	0.5
Three-phase 2 hp motor, fully loaded	0.84

Homework

- HW #36 due today by 4:30 pm in EE 325B
- HW #37 due Fri.: DeCarlo & Lin, Chapter 11:
  - Problem 6
  - Problem 9