ECE 201, Section 3
Lecture 25

Prof. Peter Bermel

October 24, 2012

Operational Amplifiers (Op-Amps)

- Active element for amplifying an electric signal
- Very common (and inexpensive) component
- Best understood as 3-terminal circuit element: 2 inputs and 1 output

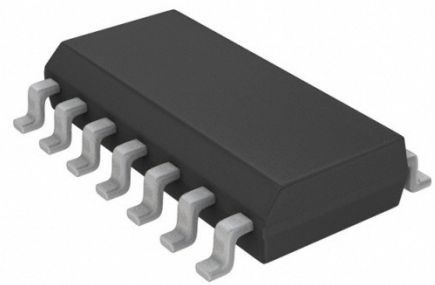

SOIC 14 Op-amp:
$0.90 each

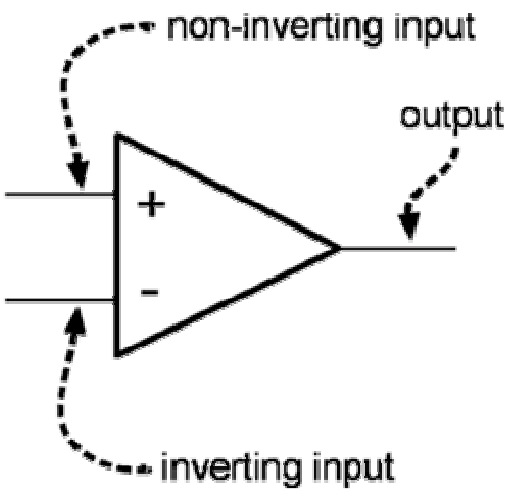

Op-Amps

- Op-amps contain the following key components:
  - Resistor connecting input voltages
  - Voltage-controlled voltage source generating output
  - Power supply on top & bottom

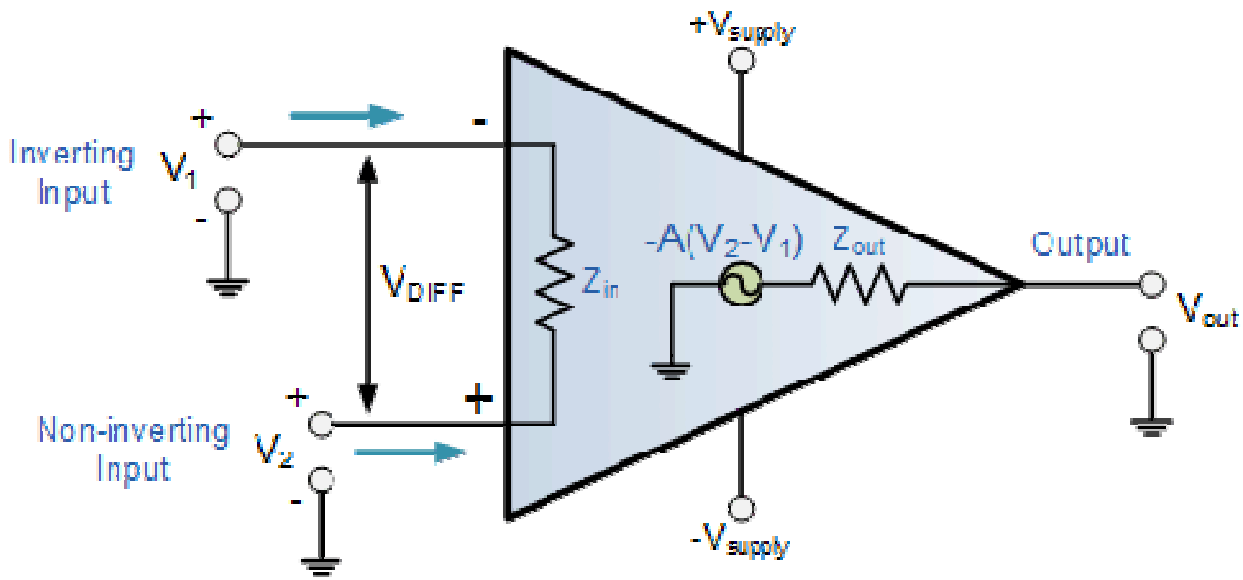

Op-Amps

- Amplification factor typically very large (100,000 or more)
- Input resistance generally very large (1 MΩ or greater)
- Thus, very common for open-loop circuit to saturate output voltage

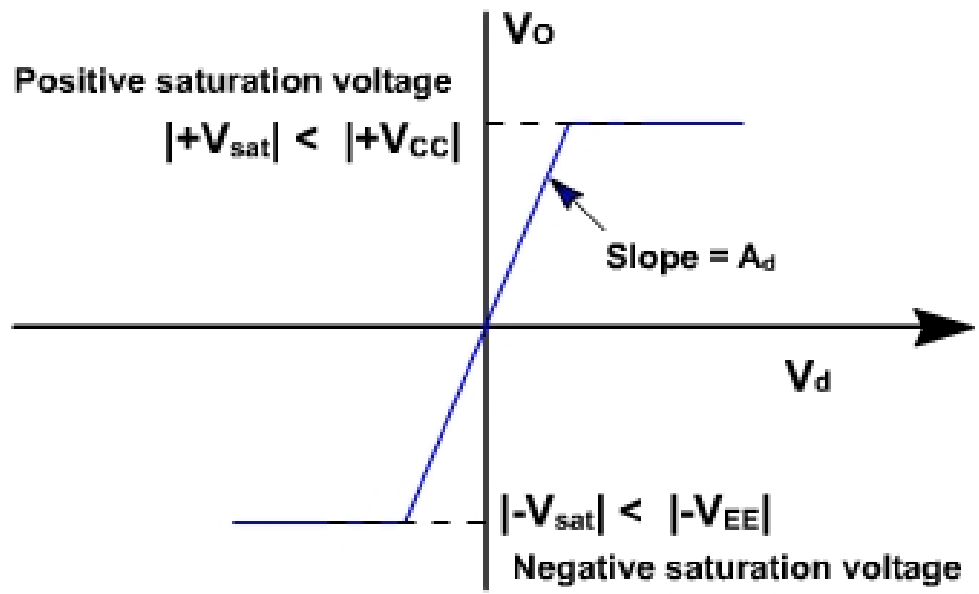

Ideal Op-Amps

- To simplify prior problem, assume resistance becomes arbitrarily large – then,
  - Negligible current flows between inputs (since $I = V_d/R_i \to 0$)
  - Both input currents become zero (since $I = I_+ = -I_-$)

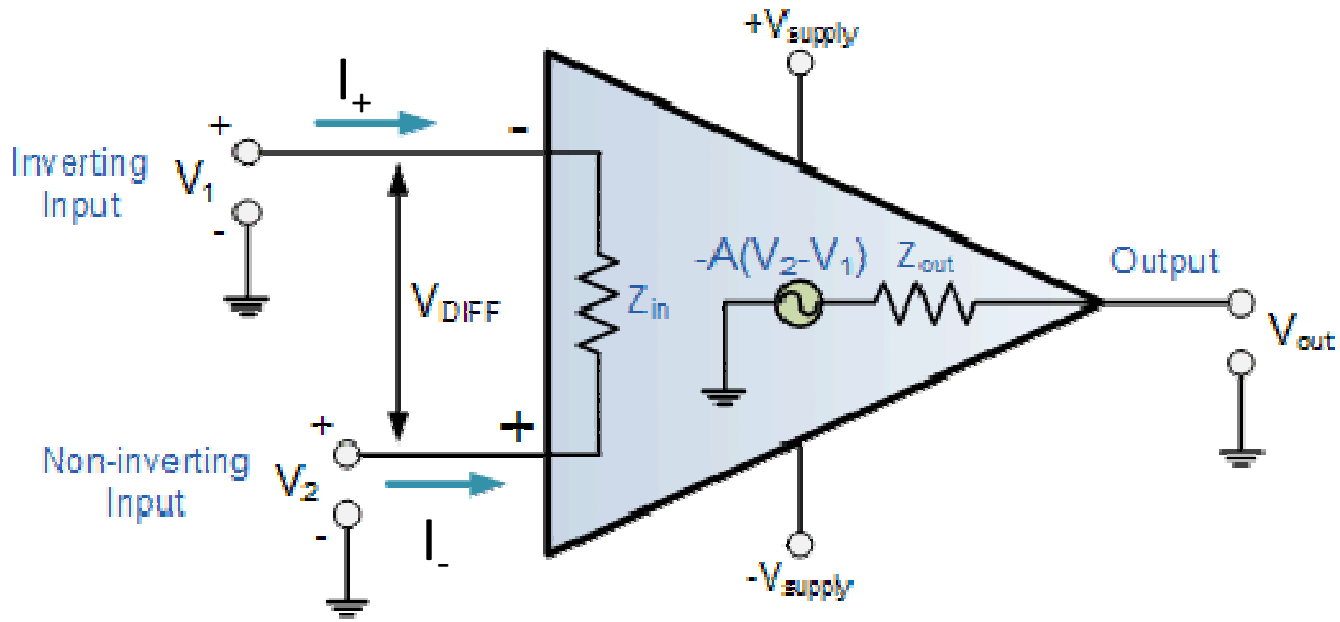

Ideal Op-Amps

- Create a closed loop configuration and let the amplification factor diverge – then,
  - Output voltage is bounded: $V_+ = A(V_+ - V_-)$
  - Thus, $V_- = \left(\frac{A-1}{A}\right) V_+$
  - In limit $A \to \infty$, $V_- \to V_+$

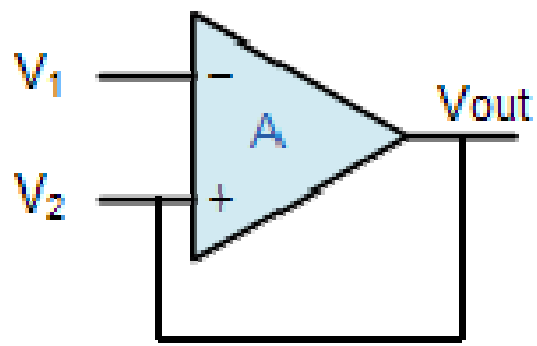

Ideal Op-Amps

- Golden rules:
  - Both input currents are zero
  - For closed loops: both input voltages are equal

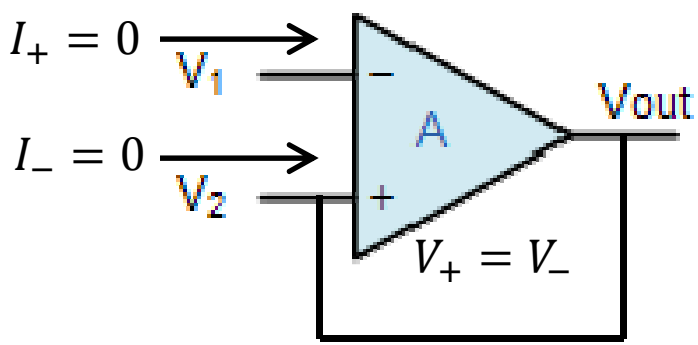

Example #1

- Quantitatively predict the behavior of this circuit:

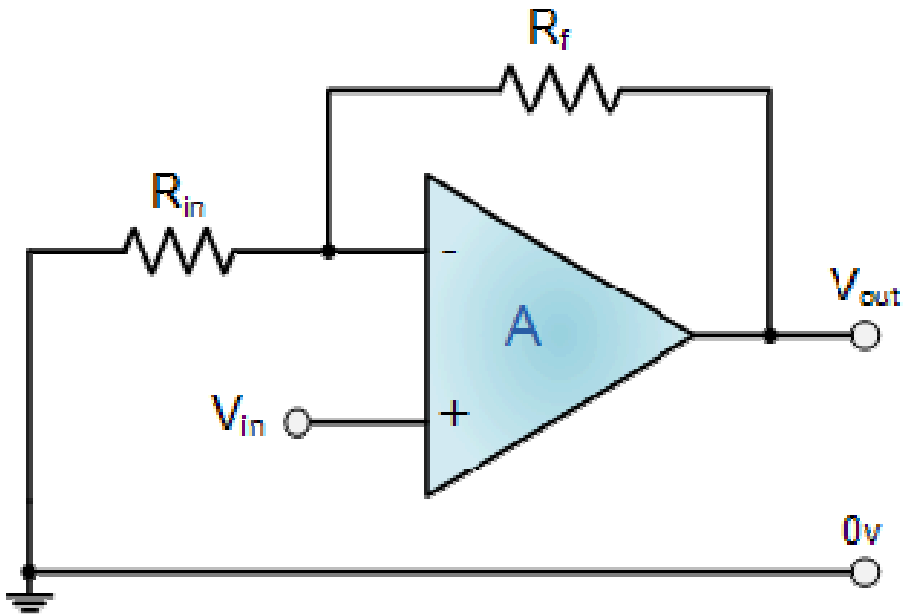

Solution

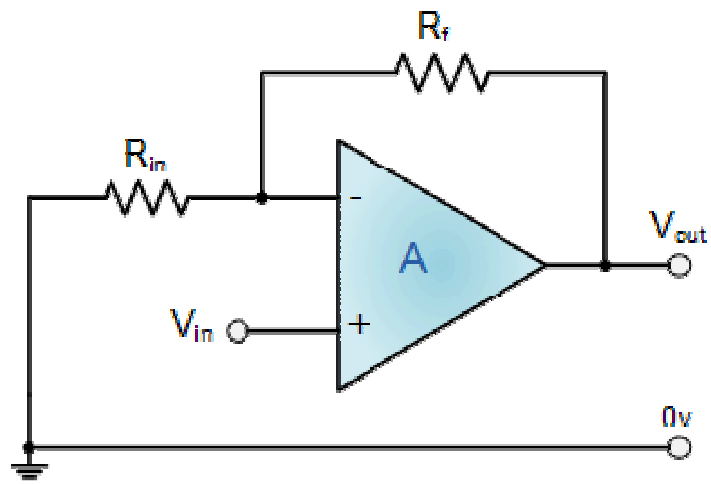

- Since $I_+ = I_- = 0$, all current flows directly from output to ground
- Thus, $I = V_{\text{out}} /(R_f + R_i)$
- With feedback, $V_+ = V_- = IR_i = V_{\text{out}}\ R_i /(R_f + R_i)$
- Amplification $A = \frac{V_{\text{out}}}{V_{\text{in}}} = \frac{R_f + R_i}{R_i} = 1 + \frac{R_f}{R_i}$

Example #2

- What's the amplification of this circuit? What's the most important difference from the last example?

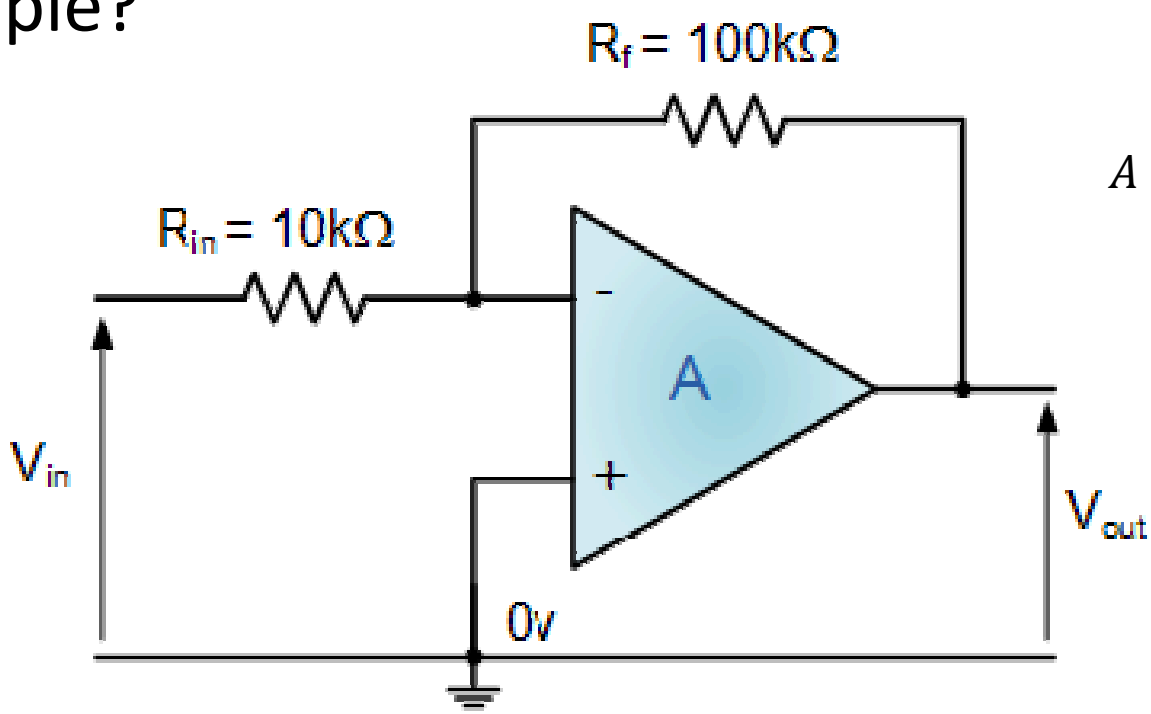

$$A = -\frac{R_f}{R_i} = -10$$

Example #3

- What is the output voltage of this circuit, and what could it be used for?

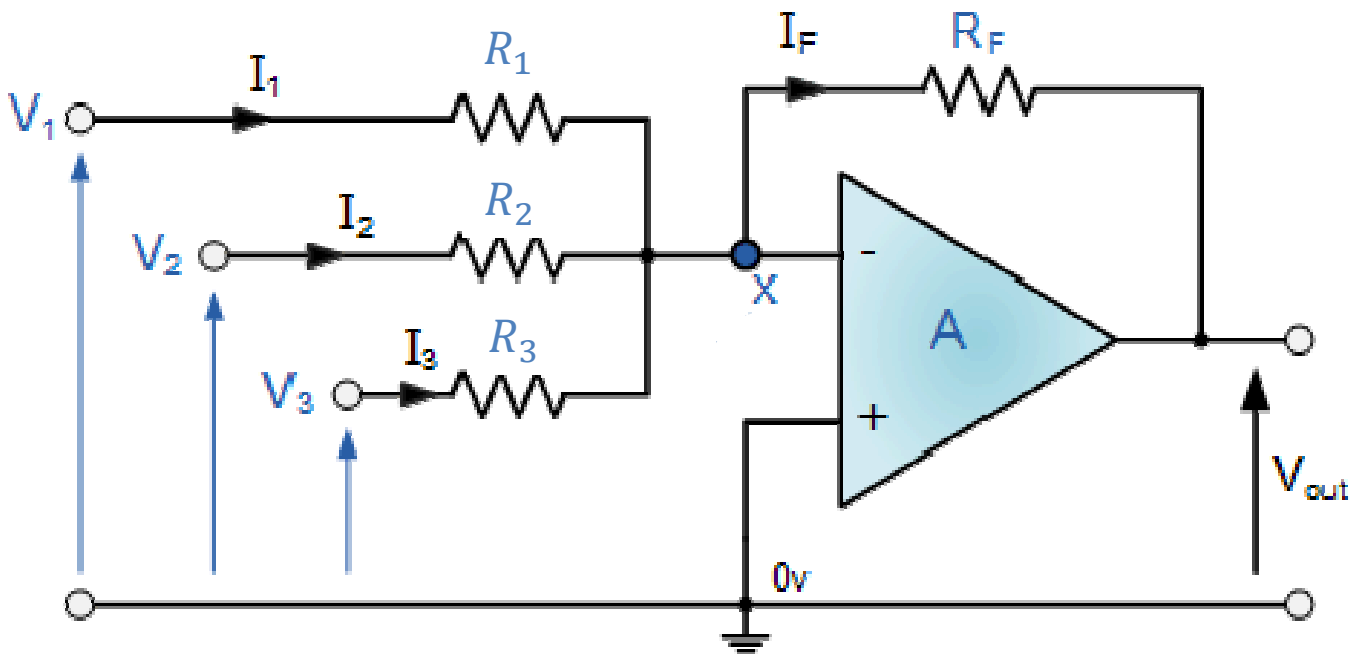

Solution

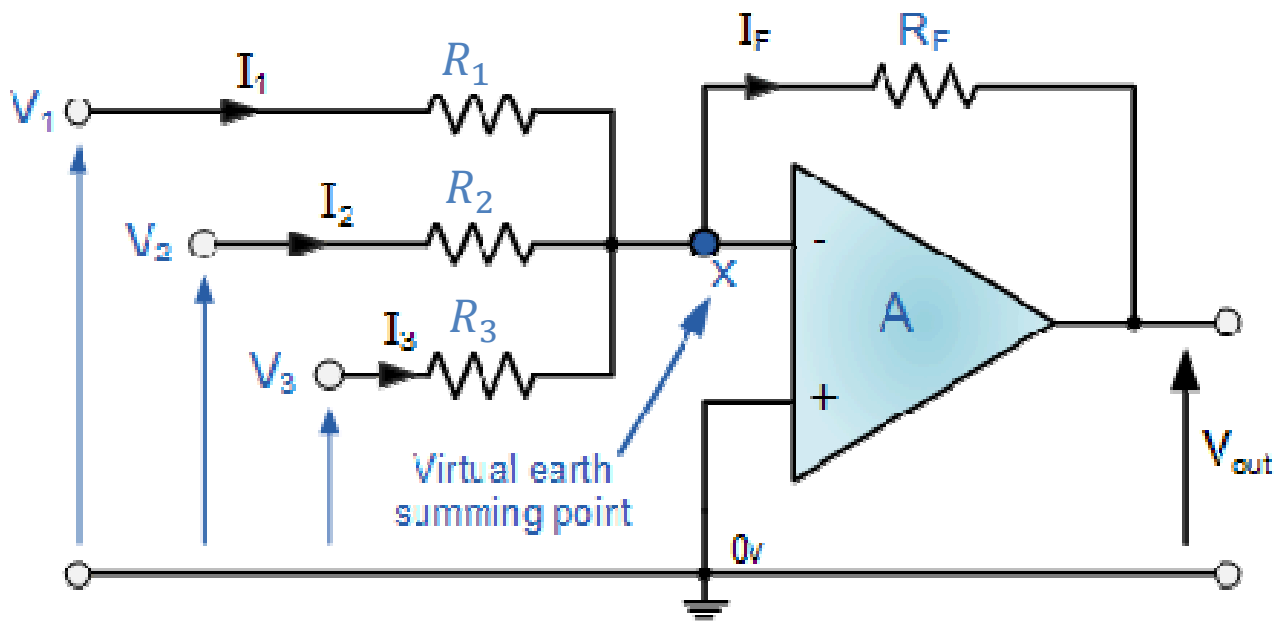

- Calculate total current: $I = \frac{V_1}{R_1} + \frac{V_2}{R_2} + \frac{V_3}{R_3}$
- Calculate the output voltage: $-V_{\text{out}} = IR_f = \frac{R_f}{R_1}V_1 + \frac{R_f}{R_2}V_2 + \frac{R_f}{R_3}V_3$
- Applications:
  - Audio mixer
  - Digital to analog conversion

Example #4

- How will this circuit behave? What might you use it for?

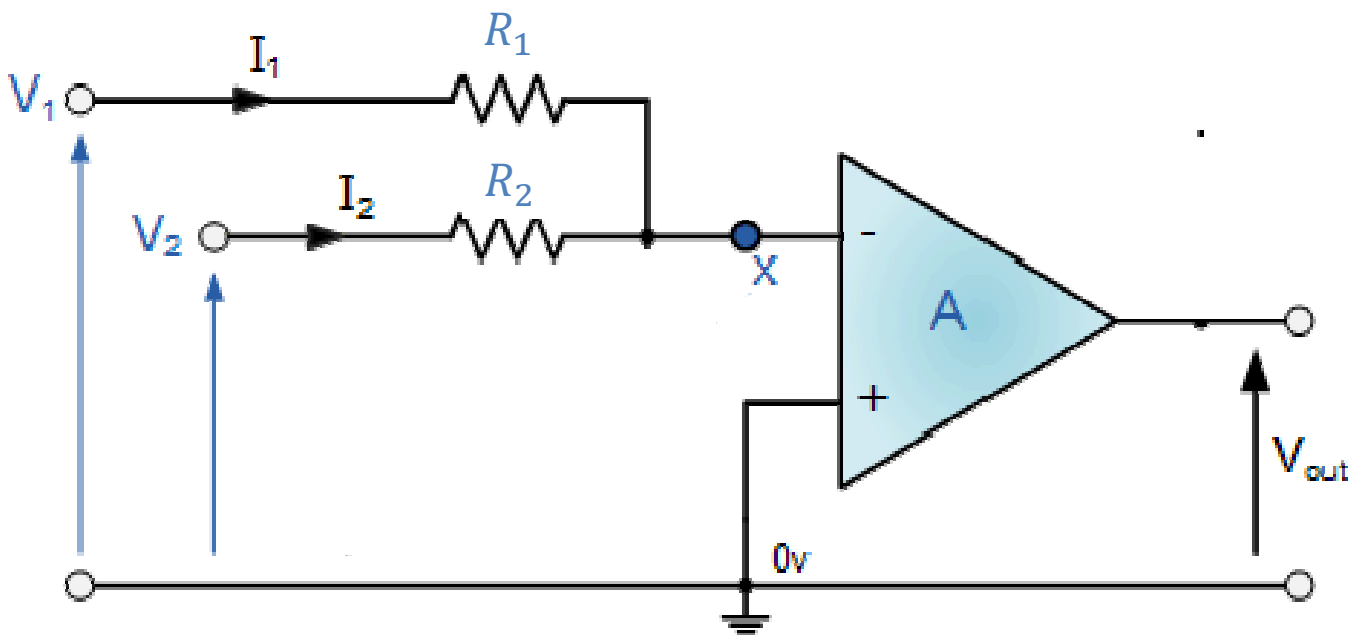

Solution

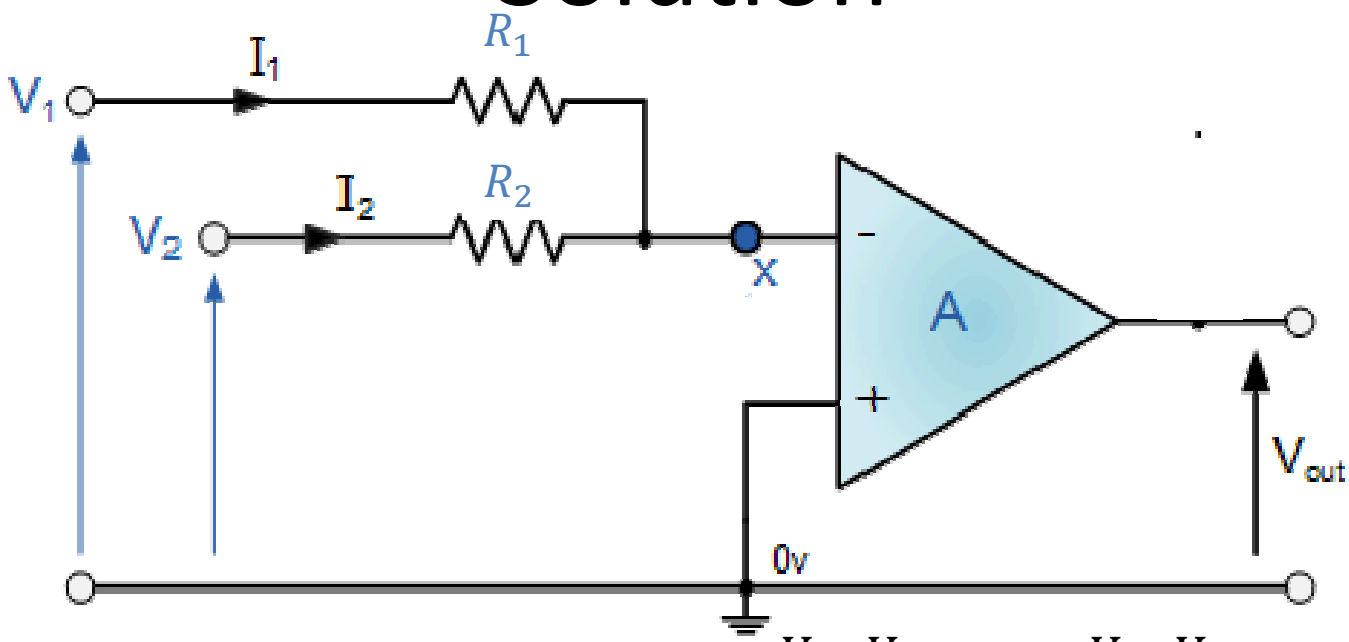

- Calculate branch currents: $I_1 = \frac{V_1 - V_x}{R_1}$; $I_2 = \frac{V_2 - V_x}{R_2}$
- No input current implies $I_1 = -I_2$, or $\frac{V_1 - V_x}{R_1} = -\frac{V_2 - V_x}{R_2}$

Thus, $R_2(V_1 - V_x) = R_1(V_x - V_2)$

$$V_x = \frac{R_2 V_1 + R_1 V_2}{R_1 + R_2}$$

Solution

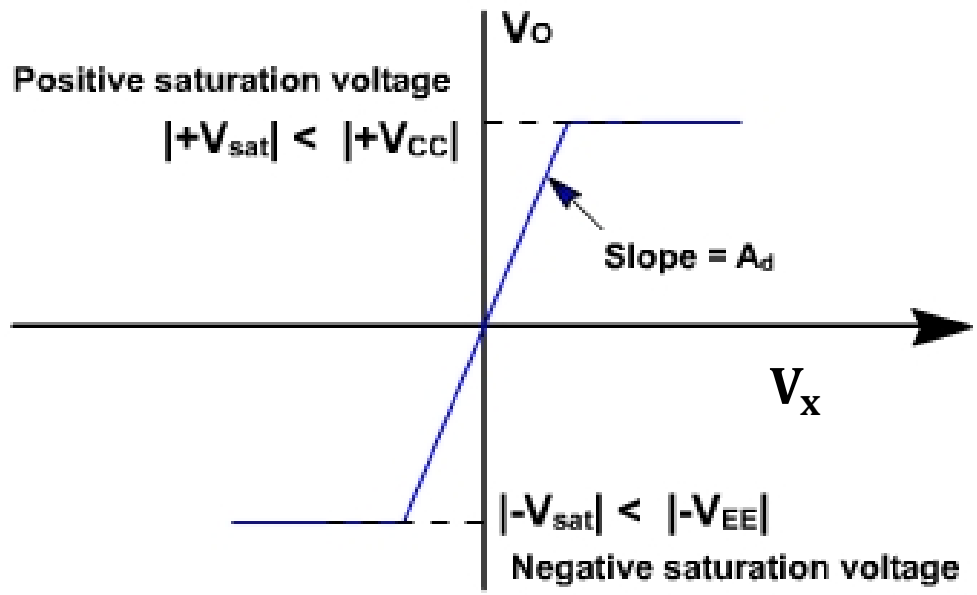

- Given that $V_x = \frac{R_2V_1+R_1V_2}{R_1+R_2}$, 3 solution regimes

Region Name	Input Values	Output Values
Positive saturation	$AV_x > V_{\text{sat}}$	V_{sat}
Active	$-V_{\text{sat}} < AV_x < V_{\text{sat}}$	AV_x
Negative saturation	$AV_x < -V_{\text{sat}}$	$-V_{\text{sat}}$

Homework

- HW #24 due today by 4:30 pm in EE 325B
- HW #25 due Fri.: DeCarlo & Lin, Chapter 9:
  - Problem 38 [Plot $v_c(t)$ and $i_L(t)$ for $0 < t < 0.16$ sec]