ECE 201, Section 3
Lecture 27

Prof. Peter Bermel

October 29, 2012

Op-Amp Review

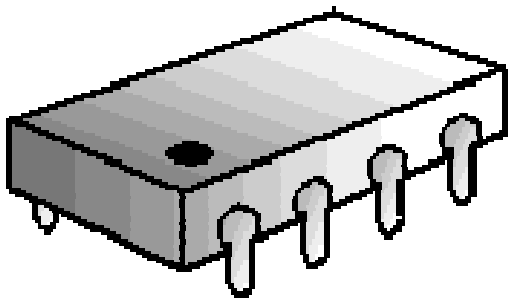

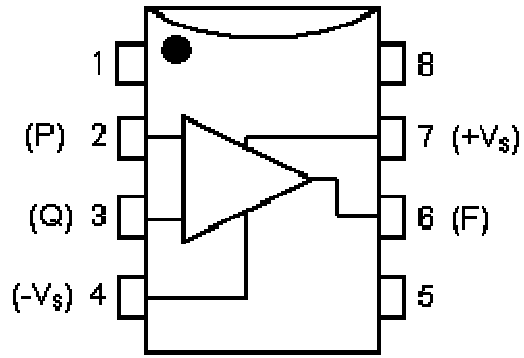

- Golden rules:
  - Both input currents are zero
  - For closed loops: both input voltages are equal

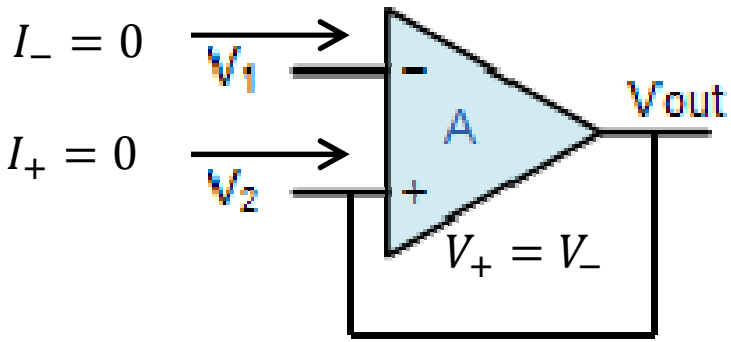

Op-Amps with Feedback

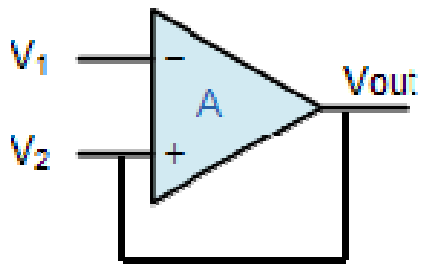

Voltage follower: $A = 1$

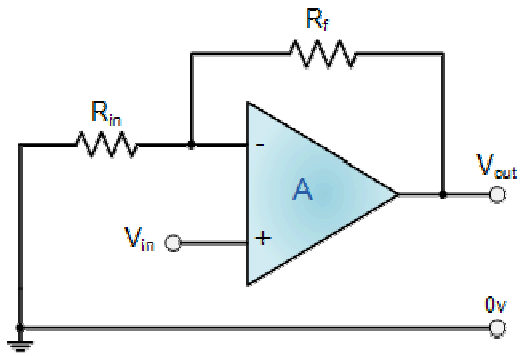

Non-inverting amp: $A = 1 + \frac{R_f}{R_i}$

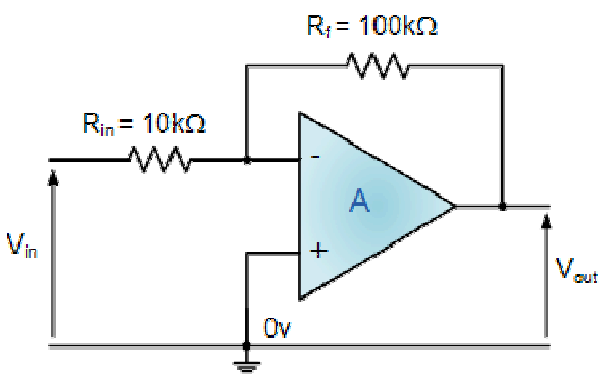

Inverting amp: $A = -\frac{R_f}{R_i}$

General Procedure to Solve Op-Amp Problems with Feedback

- Find V_+ or V_- with golden rule, $I_+ = I_- = 0$ (usually easiest for input unconnected to output)
- Find other voltage with golden rule: $V_+ = V_-$
- Apply KCL to input terminal connected to output to find residual current and output voltage
- If necessary, apply KCL at output node

Example

- What is the Thevenin equivalent of this inverted amplifier op-amp circuit?

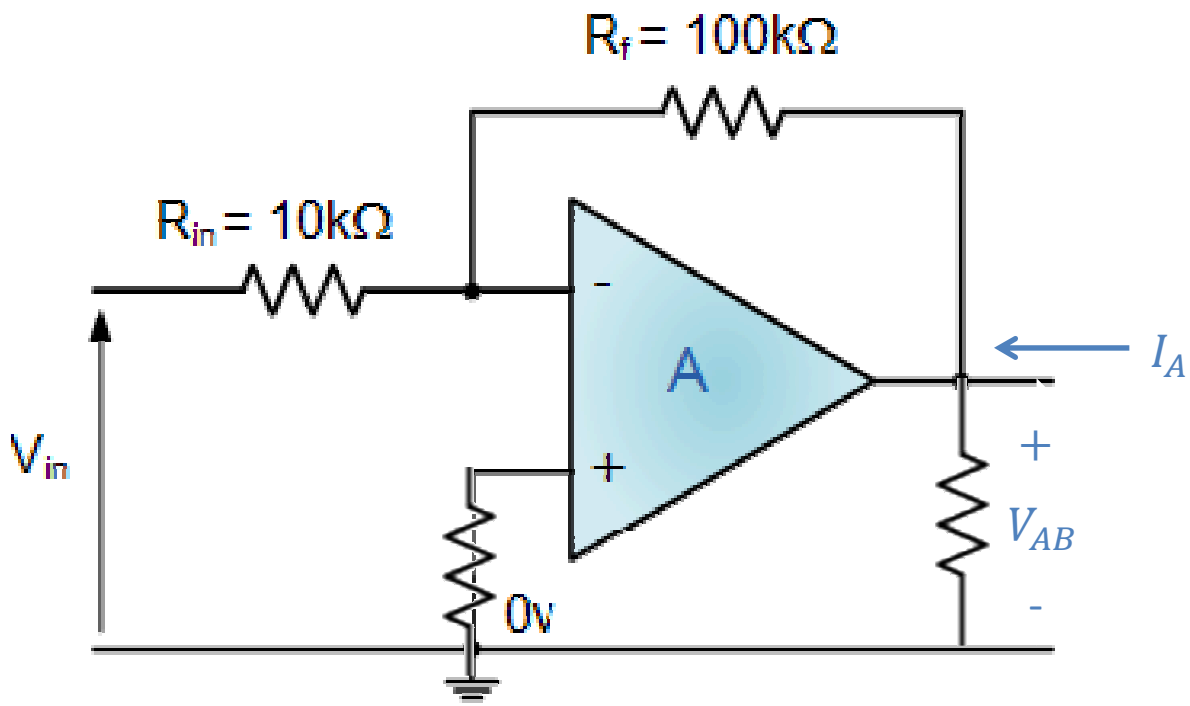

Solution

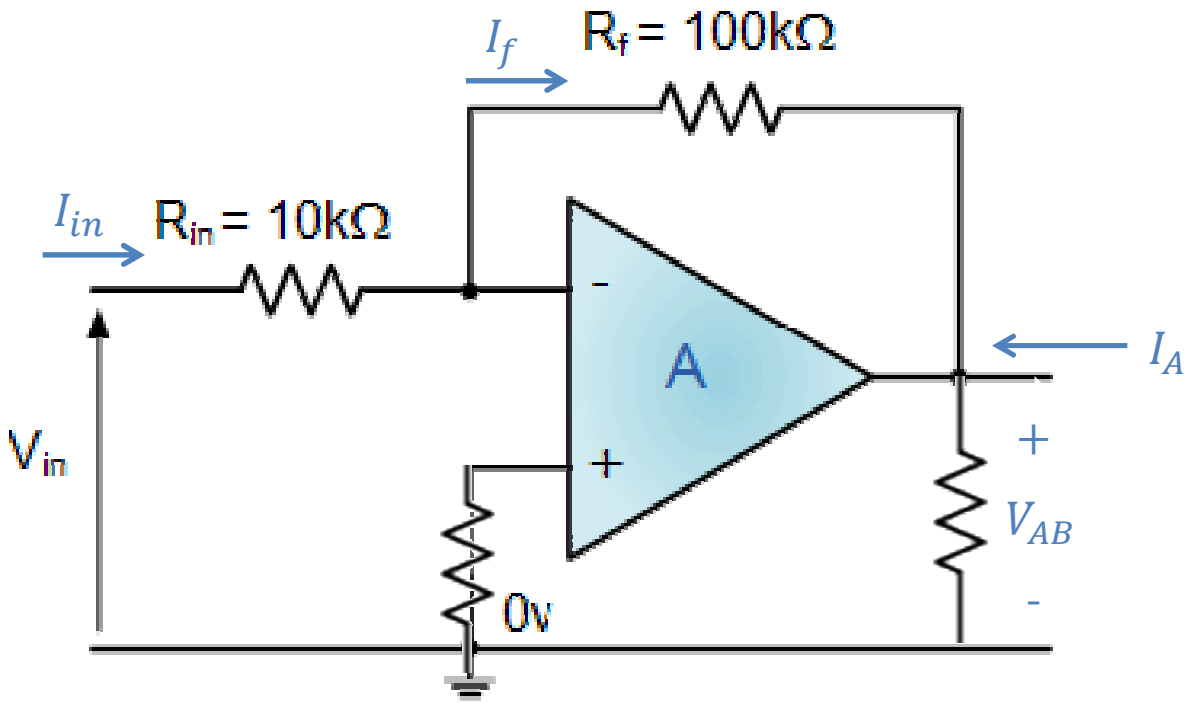

- Since $I_+ = 0\ A$, $V_+ = 0\ V$, and thus, $V_- = 0$
- By Ohm's law, $I_{in} = \frac{V_{in}-0}{R_{in}}$, and $V_{AB} = -I_f R_f$
- By KCL, $I_{in} = I_f$, so $V_{AB} = -\frac{R_f}{R_{in}} V_{in}$; independent of I_A, so $R_{th} = 0\ \Omega$!

Example

- What is the total output voltage for this circuit in general? What if $R_2 = R_3$, $V_1 = 0$, $V_2 - V_3 = 4$ V, and $R_1 = 8R$?

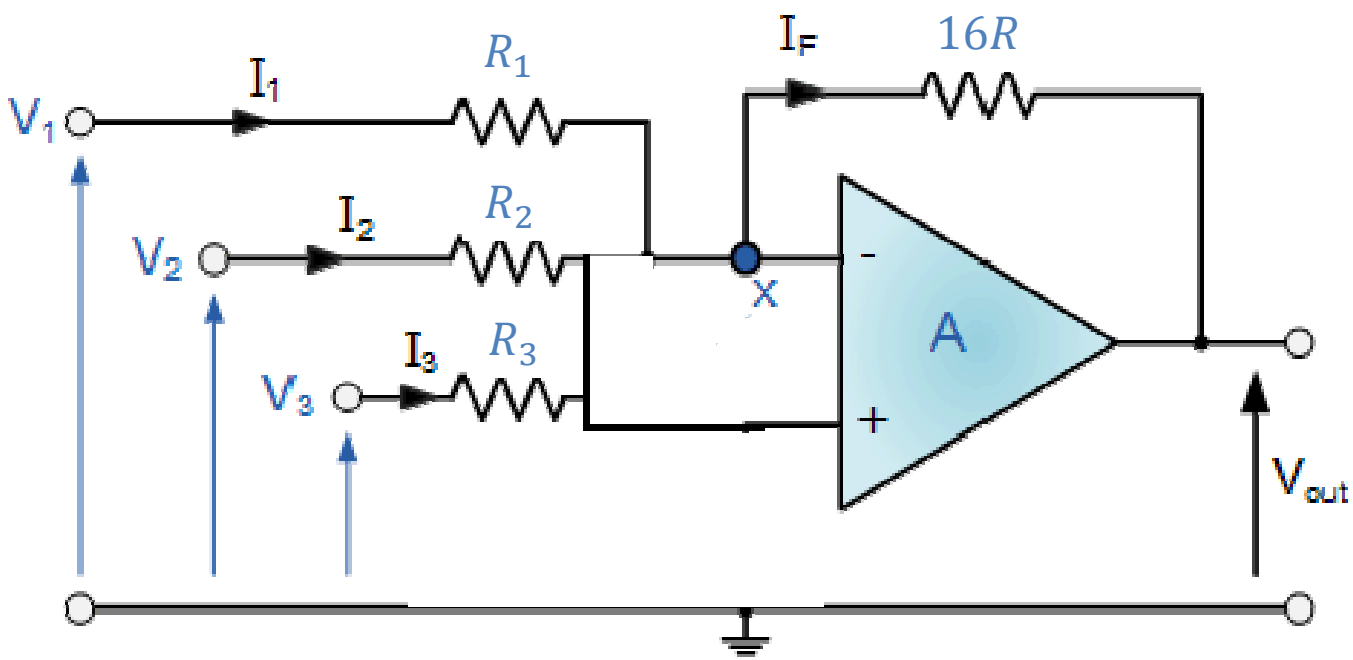

Solution

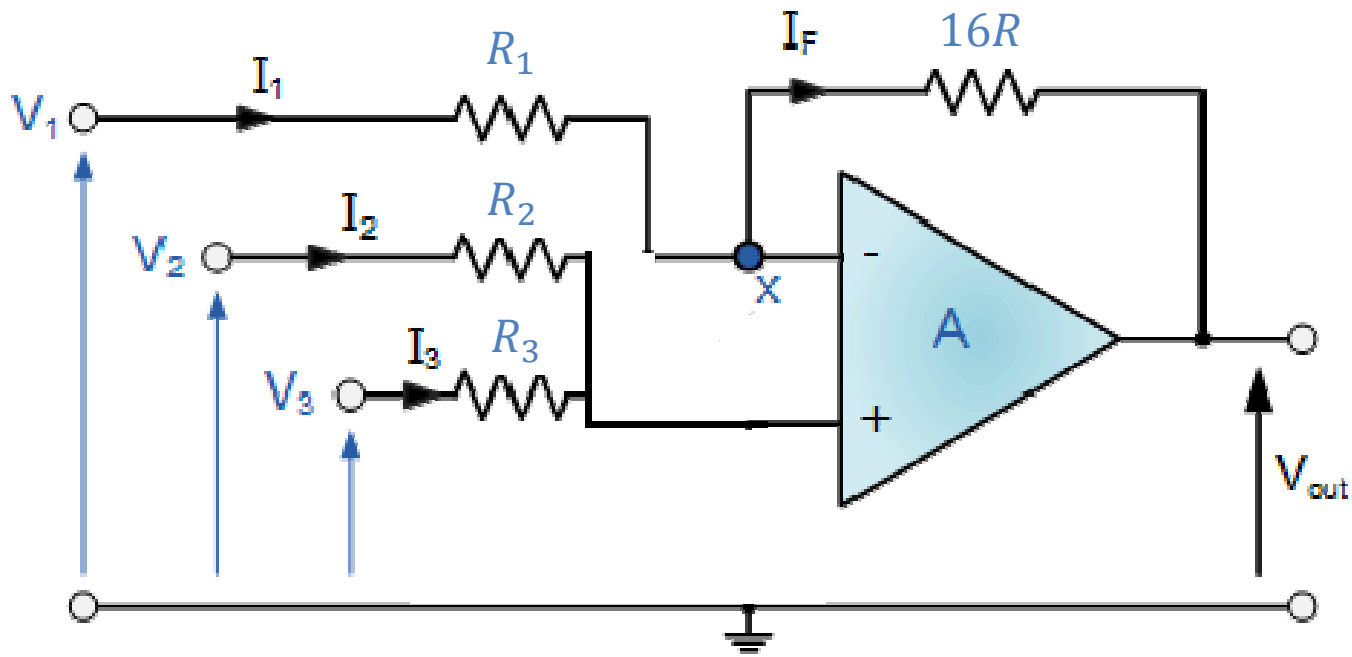

- By golden rule #1, $V_x = V_1 - I_1 R_1 = V_2 - I_2 R_2$
- By golden rule #2, $I_2 = -I_3$, and $I_1 = I_F$
- By Ohm's law, $V_x - V_{\text{out}} = I_1 \cdot 16R$

Solution

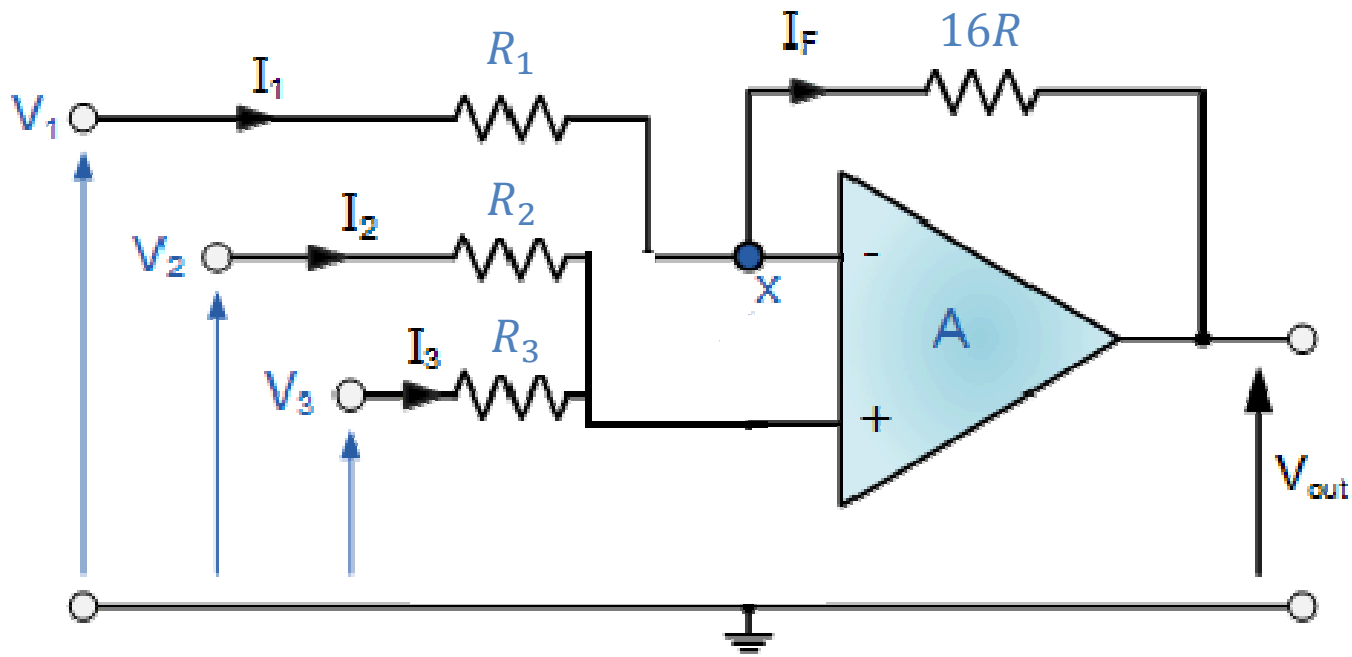

- Since $V_{\text{out}} = V_x - I_1 \cdot 16R$ and $V_1 - V_x = I_1 R_1$, we can write:

$$V_{\text{out}} = V_x - (16R/R_1)(V_1 - V_x)$$

- Need an expression for V_x!

Solution

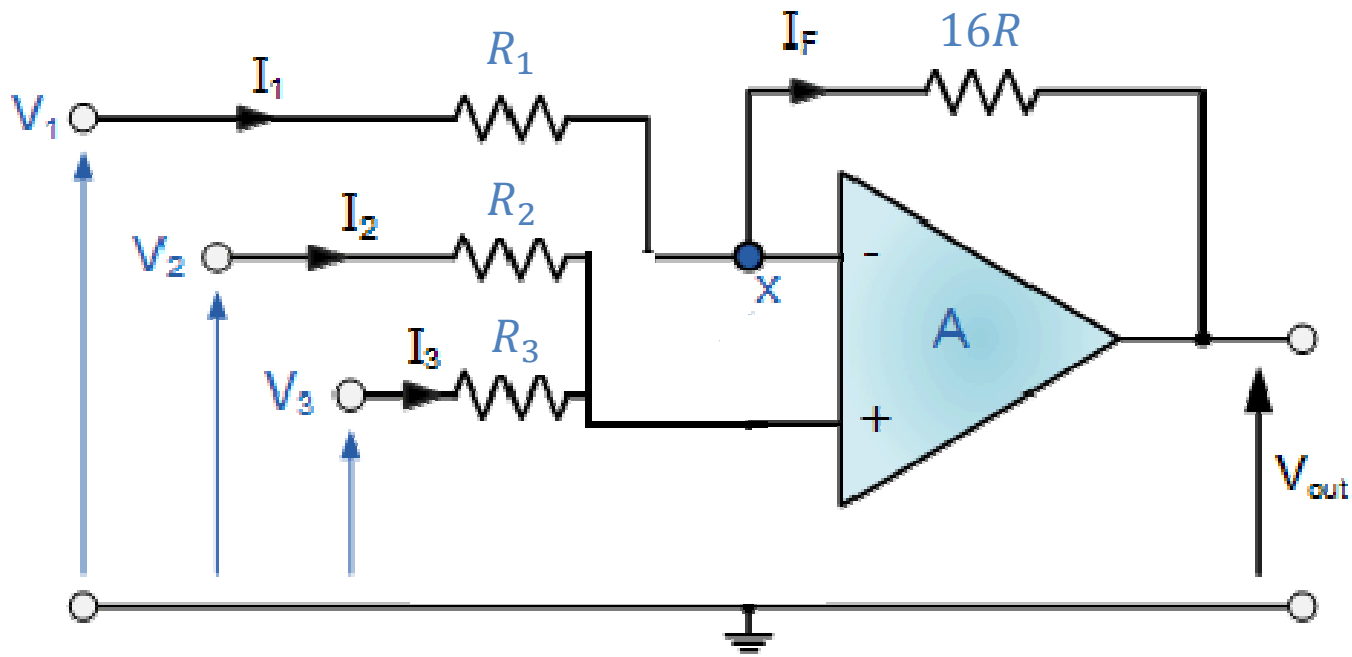

- We now obtain:

$$V_{\text{out}} = (1 + 16R/R_1)(V_2 - V_3)R_3/(R_2 + R_3) - (16R/R_1)V_1$$

- If $R_2 = R_3$, $V_1 = 0$, $V_2 - V_3 = 4$ V, and $R_1 = 8R$:

$$V_{\text{out}} = (1 + 16R/8R) \cdot 4R_2/(R_2 + R_2) - (16R/8R) \cdot 0$$

$$V_{\text{out}} = (1 + 2) \cdot 4/2 = 6 \text{ V}$$

Example

- What is the Thevenin equivalent circuit for this setup? What unusual behavior distinguishes it from a non-inverting amplifier?

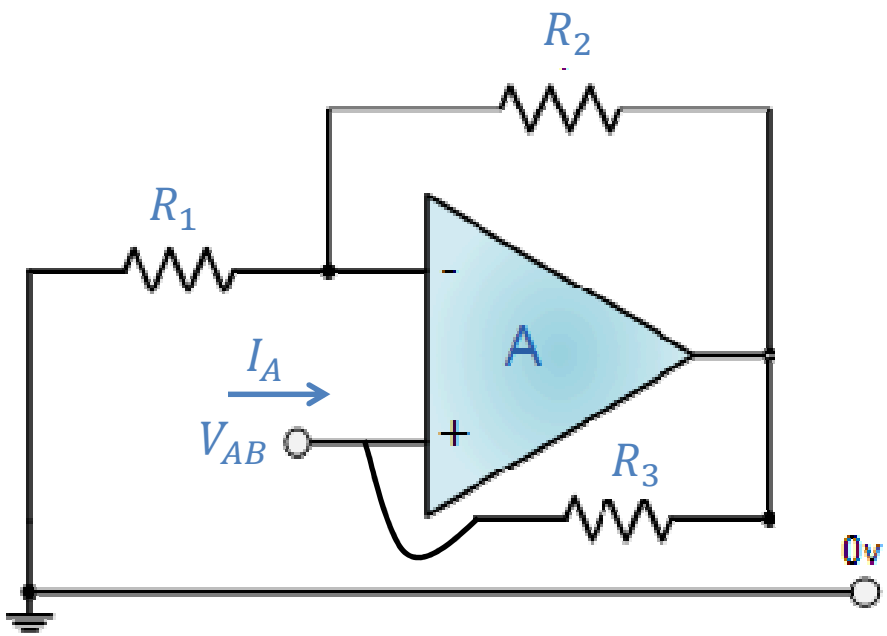

Solution

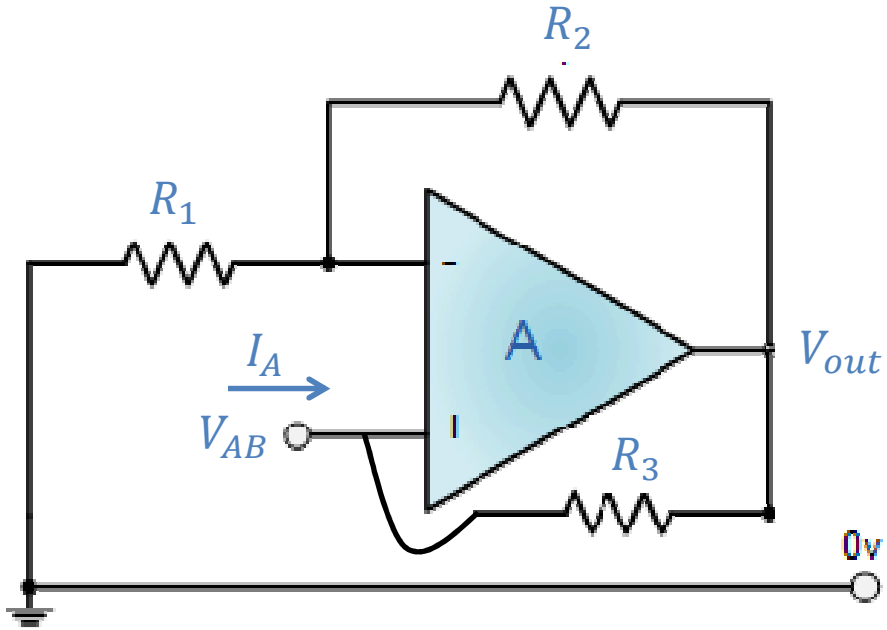

- Let's find V_{out} through 2 KVL paths:
  - Lower branch: $V_{out} = V_{AB} - I_A R_3$
  - Upper branch: $I_1 = V_{AB}/R_1;\ V_{out} = V_{AB} + I_1 R_2$

Solution

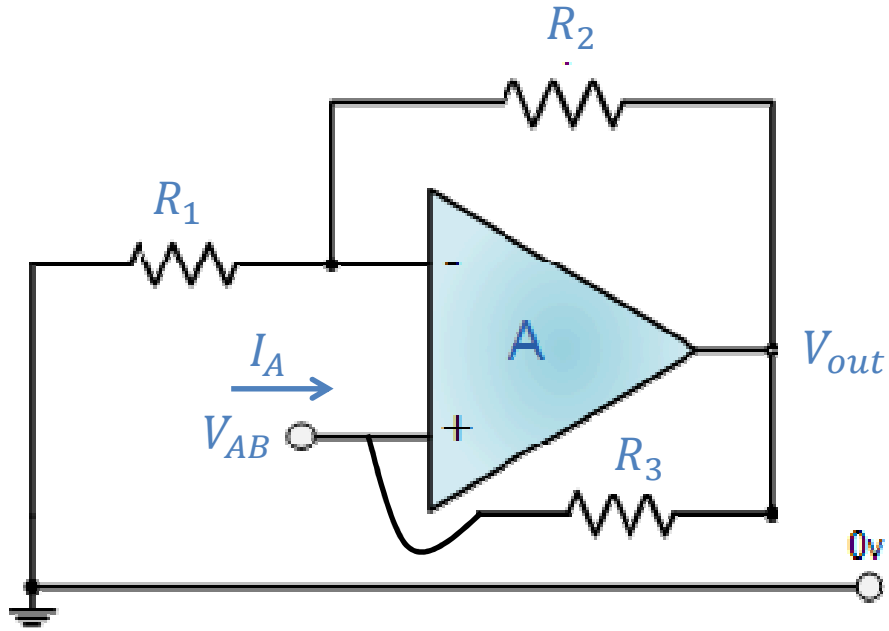

- Equating our 2 expressions for V_{out}:

$$V_{out} = V_{AB} - I_A R_3 = V_{AB} + V_{AB} R_2 / R_1$$

$$-I_A R_3 = \frac{V_{AB} R_2}{R_1}$$

- Comparing with Thevenin circuit equation $V_{AB} = R_{th} I_A + V_{oc}$ yields:

$$V_{oc} = 0;\ R_{th} = -\frac{R_1 R_3}{R_2}$$

Example

- What is the Thevenin equivalent of this op-amp circuit, containing a dependent source?

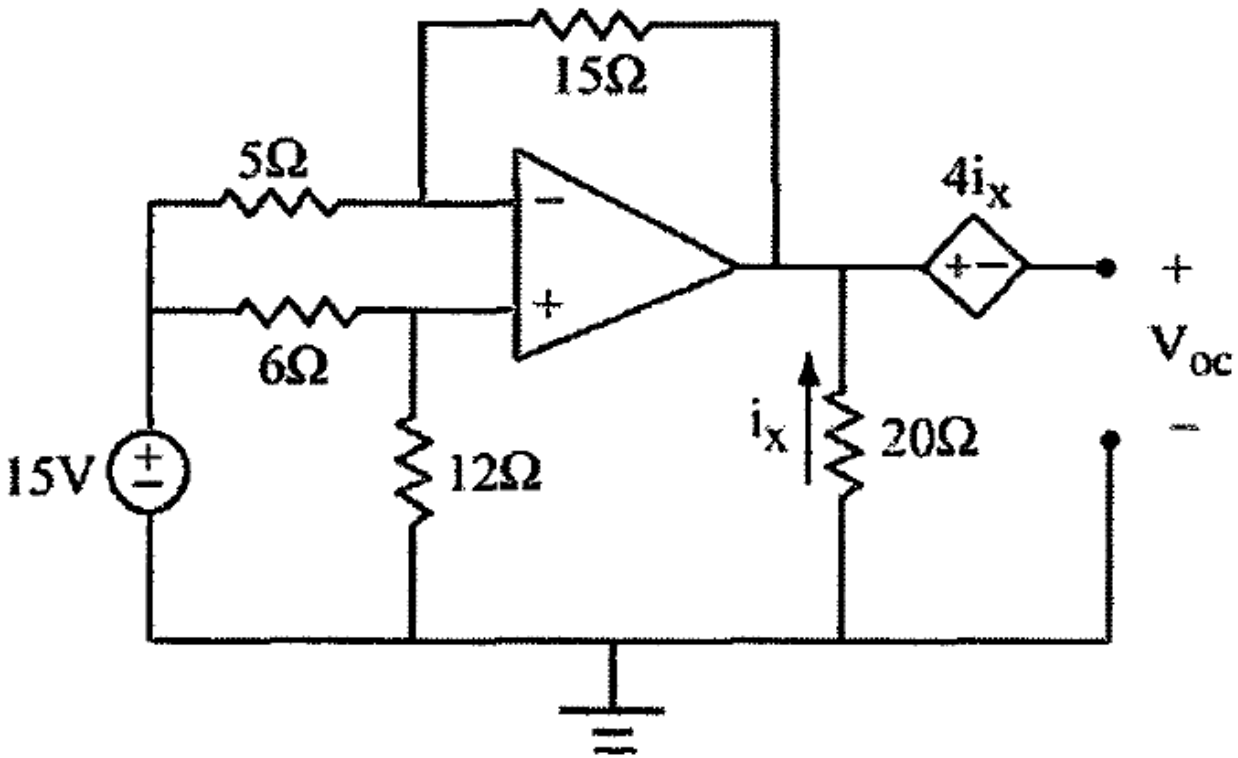

Solution

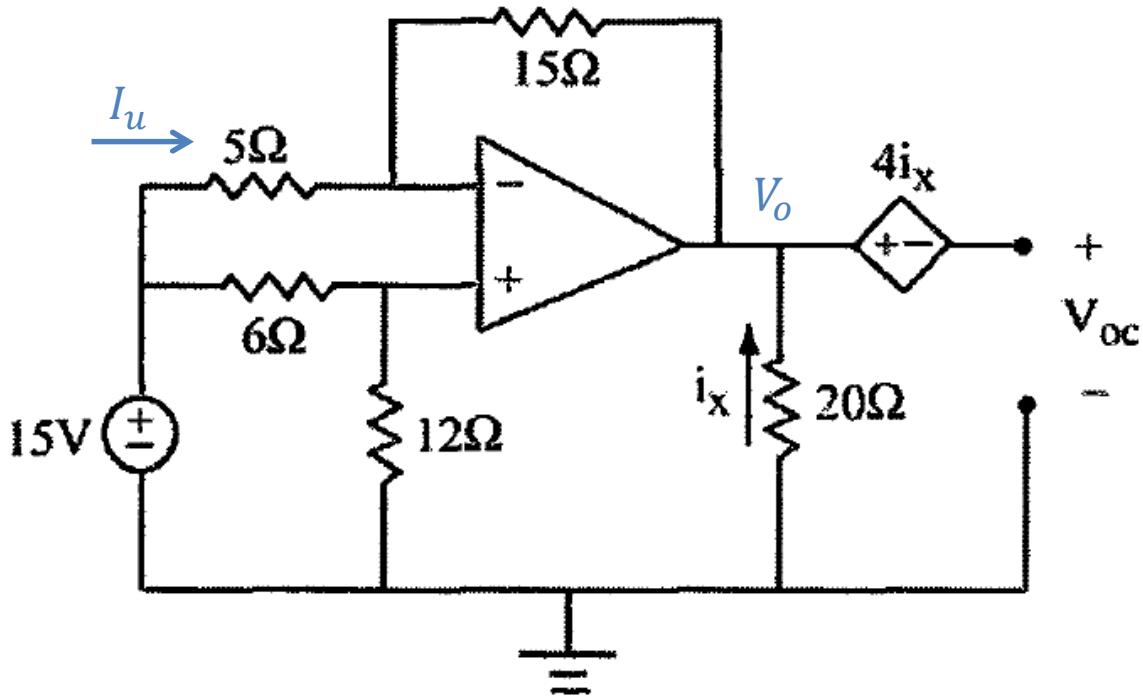

- By voltage division: $V_+ = \frac{12}{6+12} \cdot 15\ V = 10\ V$
- Thus, $I_u = \frac{15-10\ V}{5\ \Omega} = 1\ A;\ V_o = 10 - I_u \cdot (15\ \Omega) = -5\ V$

Solution

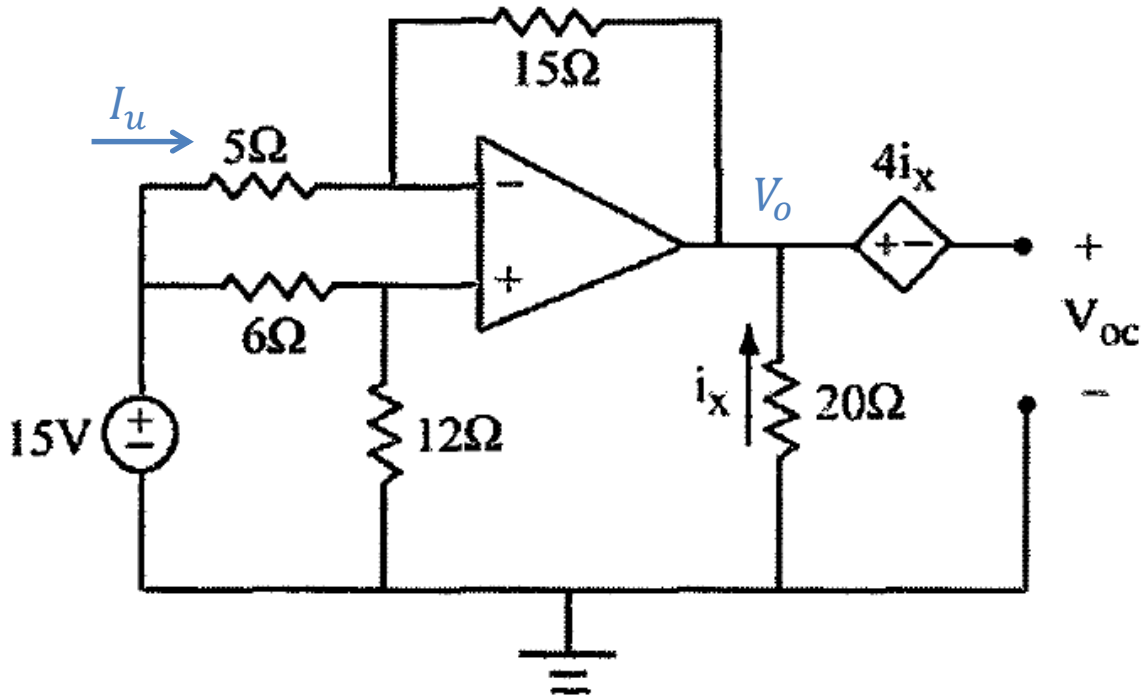

- By Ohm's law: $I_x = \frac{0-V_o}{20\ \Omega} = \frac{1}{4}$
- By KVL: $V_{AB} = V_o - 4I_x = -5 - 4 \cdot \frac{1}{4} = -6\ V$
- Thus, $V_{oc} = -6\ V$, and $R_{th} = 0\ \Omega$

Homework

- HW #26 due today by 4:30 pm in EE 325B
- HW #27 due Wed.: DeCarlo & Lin, Chapter 4:
  - Problem 9
  - Problem 11