ECE 201, Section 3
Lecture 29

Prof. Peter Bermel

November 2, 2012

Who Uses Complex Numbers?

- Cardano and Bombelli discovered ‘fictitious’ numbers solving cubic equations in 1500’s
- Euler, Wessel, Argand and Gauss spread modern understanding in 1700’s
- Found widespread use in physics and engineering in 20th century because of:
  - Electromagnetism
  - Sound Waves
  - Quantum Mechanics
  - Signal processing

Why Use Complex Numbers?

- Simplifies mathematical representation of sinusoidal oscillation
- Allows for solution of range of difficult problems with powerful theorems:
  - MacLaurin and Taylor theorems
  - Residue theorem

When and Where Should You Use Complex Numbers

- In solving trigonometric problems
- In solving second order differential equations
- When problems are otherwise intractable
- Can be used in any problem involving reals – when in doubt, try it out

What Are Complex Numbers?

- Pairs of real numbers in complex plane:
  - Cartesian representation: $z=x+iy$
  - Polar representation: $z=re^{i\theta}$
- Converting between representations:
  - Polar to Cartesian: $x=r\cos(\theta)$; $y=r\sin(\theta)$
  - Cartesian to Polar: $r=(x^2+y^2)^{1/2}$; $\theta=\tan^{-1}(y/x)$

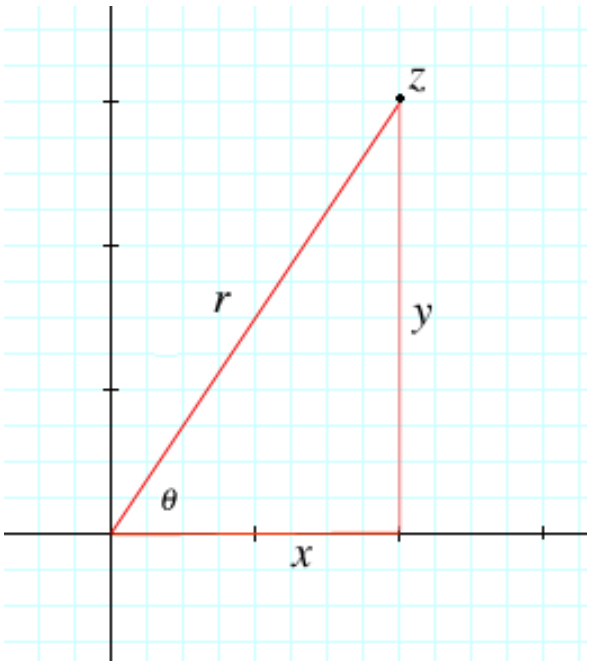

How Do We Use Complex Numbers?

- Complex extension of unary (1 term) arithmetic:
  - Exponentiation: $z^n=(re^{i\theta})^n=r^ne^{in\theta}$
  - Absolute value: $|z|=|re^{i\theta}|=r=|x+iy|=(x^2+y^2)^{1/2}$
  - Natural logarithm: $\ln(z) = \ln(re^{i\theta})=\ln(r)+i\theta$
- Complex extension of binary (2 term) arithmetic:
  - Addition: $z_1+z_2=(x_1+iy_1)+(x_2+iy_2)=x_1+x_2+i(y_1+y_2)$
  - Subtraction: $z_1+z_2=(x_1+iy_1)+(x_2+iy_2)=x_1+x_2+i(y_1+y_2)$
  - Multiplication: $z_1z_2=r_1e^{i\theta_1}\, r_2e^{i\theta_2} = r_1r_2e^{i(\theta_1+\theta_2)}$
  - Division: $z_1/z_2=r_1e^{i\theta_1}/r_2e^{i\theta_2} = (r_1/r_2)e^{i(\theta_1-\theta_2)}$
- Additional operations:
  - Complex conjugation: $z^*=(x+iy)^*=x-iy$

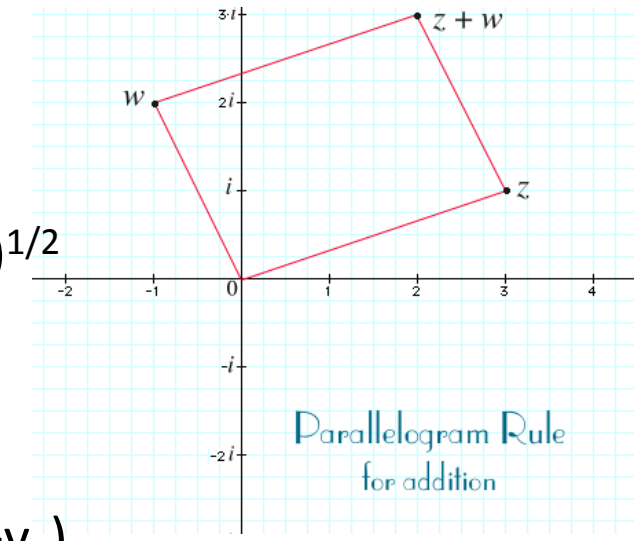

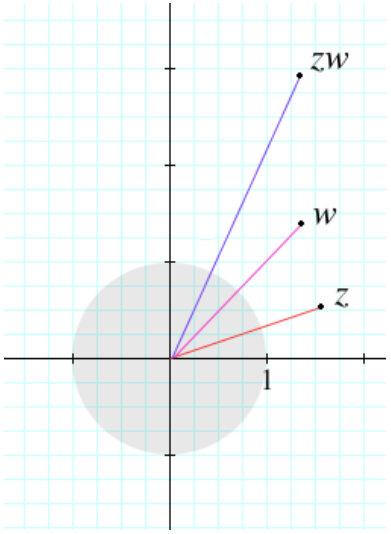

Complex Exponentials

- Some key equations:

$$e^{i\omega t} = \cos\omega t + i\sin\omega t$$

$$e^{(i\omega-\Gamma)t} = e^{-\Gamma t}(\cos\omega t + i\sin\omega t)$$

$$\cos\omega t = \frac{e^{i\omega t} + e^{-i\omega t}}{2}$$

$$\sin\omega t = \frac{e^{i\omega t} - e^{-i\omega t}}{2i}$$

Deriving Trigonometric Identities

Can use Euler's equation to write:

$$
\begin{aligned}
e^{i(\alpha+\beta)} &= e^{i\alpha}e^{i\beta} \\
&= (\cos\alpha + i\sin\alpha)(\cos\beta + i\sin\beta) \\
&= \cos\alpha\cos\beta - \sin\alpha\sin\beta \\
&\quad + i(\sin\alpha\cos\beta + \cos\alpha\sin\beta)
\end{aligned}
$$

Which yields:

$$\cos(\alpha+\beta) = \cos\alpha\cos\beta - \sin\alpha\sin\beta$$

$$\sin(\alpha+\beta) = \sin\alpha\cos\beta + \cos\alpha\sin\beta$$

Example #1

- How does this series RC circuit respond to an AC current source turned on at t=0?

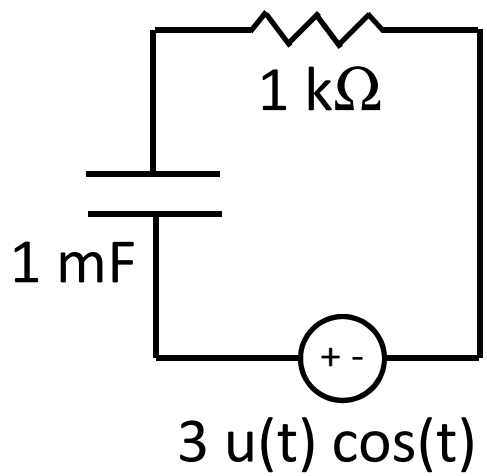

Solution

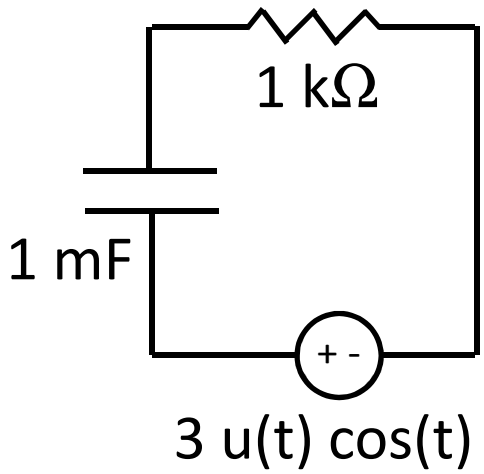

- From KCL, we obtain:

$$RC\frac{dV}{dt} + V = 3u(t)\cos t$$

- Recall the homogeneous solution is:

$$V(t) = V_o e^{-t/\tau}, \text{ where } \tau = RC = 1 \text{ s}$$

- We can guess the driven solution is:

$$V(t) = A(t)\cos t = \mathrm{Re}\left[A(t)e^{it}\right]$$

Solution

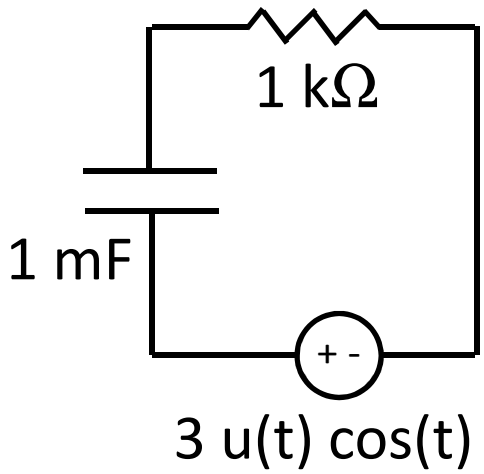

- Substituting $V(t) = A(t)e^{it}$:

$$\left(\frac{dA}{dt} + iA + A\right)e^{it} = 3u(t)e^{it}$$

$$A = 3/(1+i)$$

- Combining our solutions yields:

$$V(t) = \frac{3}{1+i}e^{it} + V_o e^{-t}$$

- Applying our initial condition (V(0)=0) yields:

$$V_o = -\frac{3}{1+i}$$

Solution

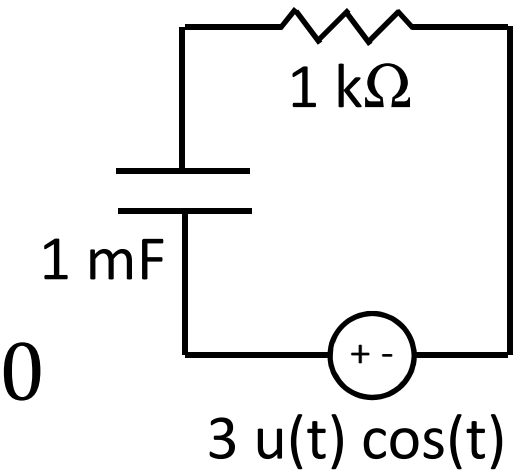

- Thus, we obtain:

$$V(t) = \begin{cases} \dfrac{3}{1+i}\left[e^{it} - e^{-t}\right], & t > 0 \\ 0, & \text{otherwise} \end{cases}$$

- The physical value of V(t) is the real part of the complex expression

Solution

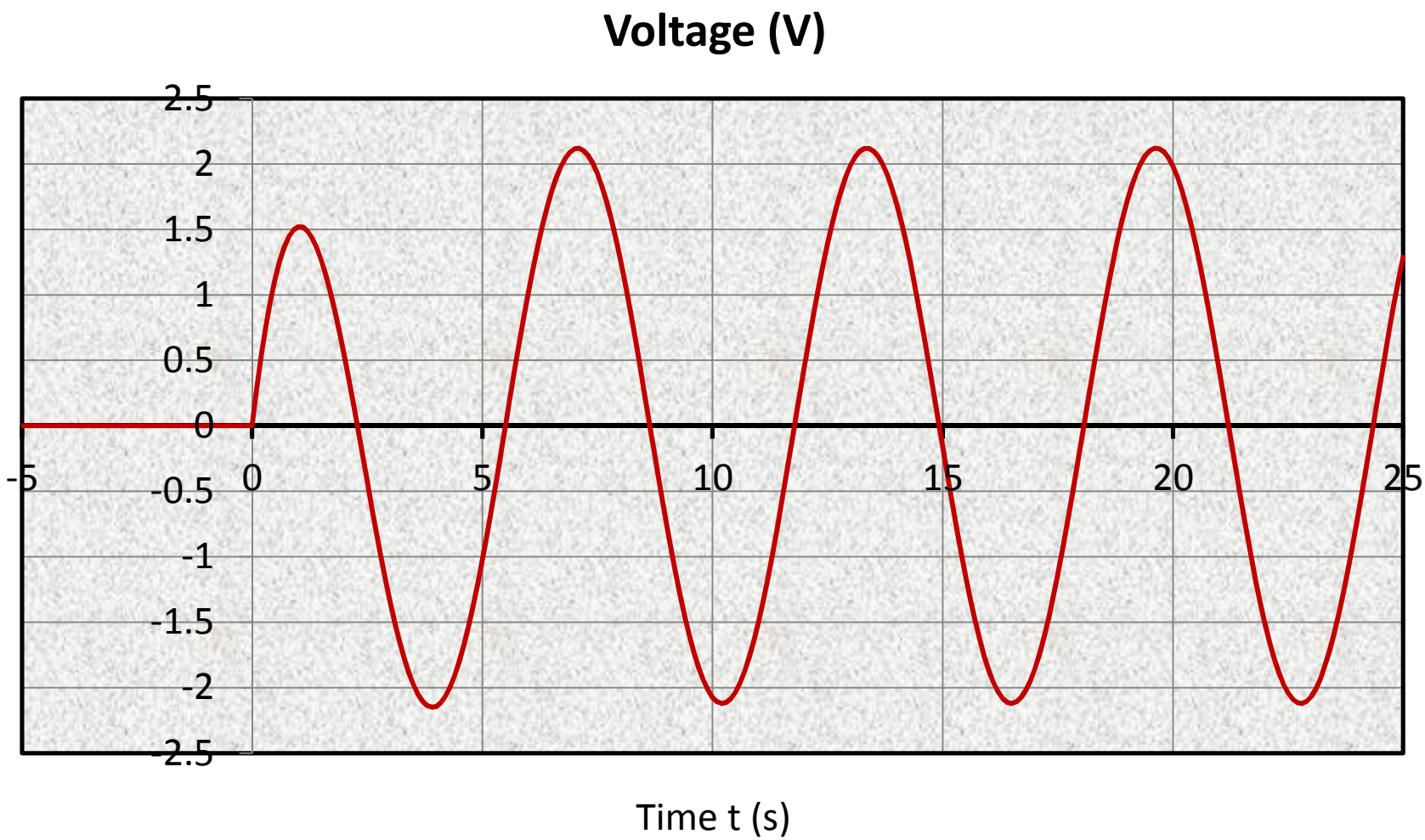

Example #2

- How does this parallel RLC circuit respond to an AC current source?

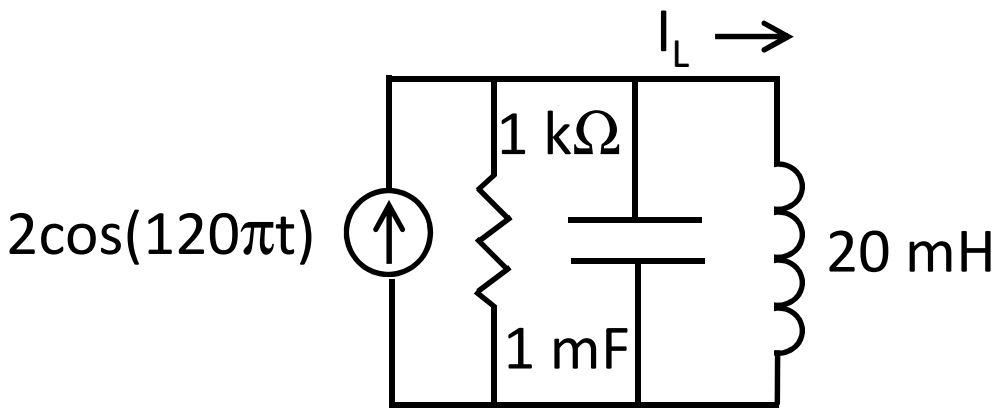

Solution

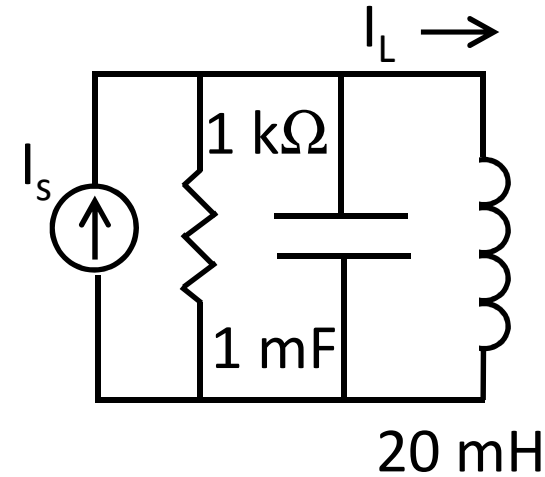

From KCL:

$$\frac{d^2 I_L}{dt^2} + 2\Gamma \frac{dI_L}{dt} + \omega_o^2 I_L = \omega_o^2 I_s$$

$$\Gamma = \frac{1}{2RC} = \frac{1}{2 \cdot 1\ \mathrm{k\Omega} \cdot 1\ \mathrm{mF}} = 0.5\ \mathrm{s}$$

$$\omega_o = \frac{1}{\sqrt{LC}} = \frac{1}{\sqrt{20\ \mathrm{mH} \cdot 1\ \mathrm{mF}}} = 223.6\ \mathrm{rad/s}$$

$$\omega' = \sqrt{\omega_o^2 - \Gamma^2} = \sqrt{223.6^2 - 0.5^2} = 223.6\ \mathrm{rad/s}$$

Solution

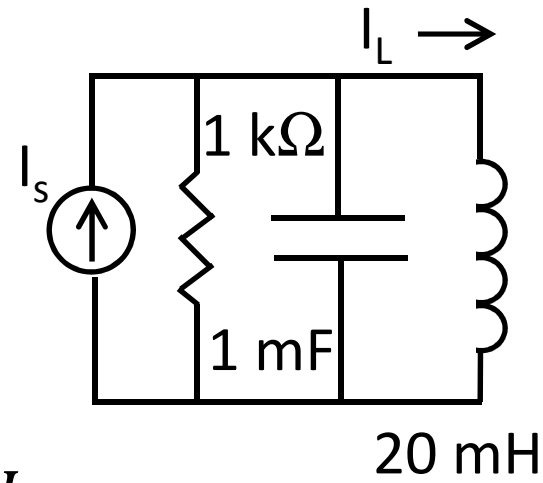

Postulating a solution of the form:

$$I_L = I_o e^{120\pi i t}$$

We substitute into:

$$\frac{d^2 I_L}{dt^2} + \frac{dI_L}{dt} + 223.6^2\, I_L = 223.6^2\, I_s$$

To obtain:

$$[(120\pi i)^2 + 120\pi i + 223.6^2] I_o e^{120\pi i t} = 223.6^2 \cdot 2e^{120\pi i t}$$

$$I_o = \frac{2 \cdot 223.6^2}{223.6^2 - (120\pi)^2 + 120\pi i} \approx -1.085$$

Phasors

- Shorthand for writing complex numbers
- Closely connected with polar representation
- General form:

$$\boldsymbol{V} = V_m \angle \phi = V_m e^{j(\omega t + \phi)}$$

- Example: for a voltage source given by $5\cos(\omega t + 30°)$, the phasor $\boldsymbol{V} = 5\angle 30°$

KCL for Phasors

- Generalization of KCL from before
- At each current junction or Gaussian surface:

$$\sum_{k=1}^{N} \boldsymbol{I}_k(t) = \sum_{k=1}^{N} I_{km}\angle\phi_k = 0$$

Phasor KCL Example

- Consider 2 input currents with phasors given by $6\angle 15°$ A and $-10\angle 45°$ A. What is the total output current?

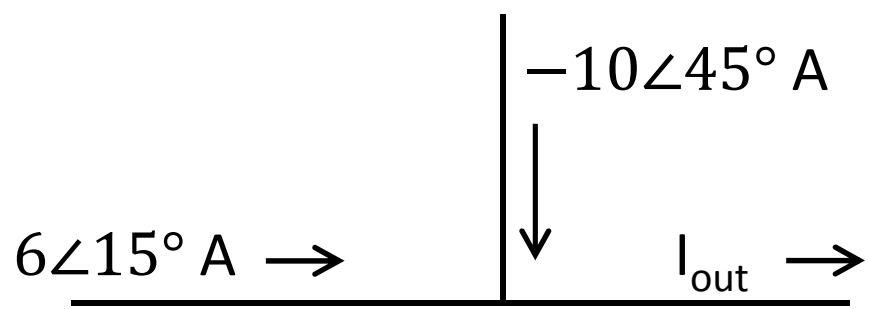

Phasor KCL Solution

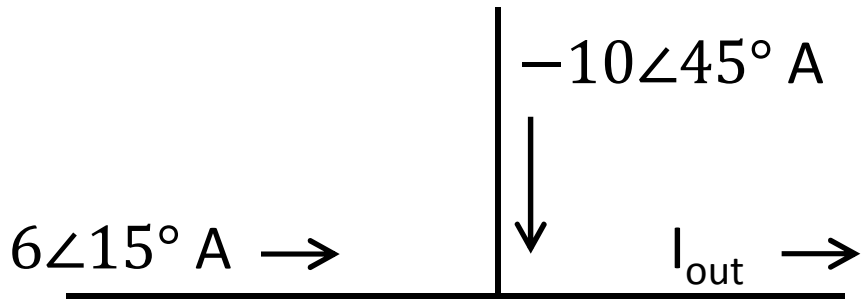

- Assuming ωt=0, we can convert to Cartesian coordinates with $x = r\cos\phi$ and $y = r\sin\phi$:

$$6\angle 15° = 6\cos 15° + j \cdot 6\sin 15° = 5.80 + 1.55j$$

$$-10\angle 45° = -10\cos 45° + j \cdot (-10)\sin 45° = -7.07 - 7.07j$$

$$6\angle 15° + -10\angle 45° = (5.80 - 7.07) + (1.55 - 7.07)j$$

$$6\angle 15° + -10\angle 45° = -1.27 - 5.52j$$

- We can convert back with $r = \sqrt{x^2 + y^2}$ and $\phi = \tan^{-1} y/x$:

$$6\angle 15° + -10\angle 45° = 5.66\angle -103° = -5.66\angle 77°$$

Homework

- HW #28 due today by 4:30 pm in EE 325B
- HW #29 due Mon.:
  - DeCarlo and Lin, Chapter 8, Problem 38
  - The op amp in the following circuit is ideal. The voltage $v_{IN}(t)$ has been toggling between -0.2V and 0.2V for a long time (as shown in the plot). Find and plot $v_{out}(t)$. Label the axes.