# ECE 201, Section 3
# Lecture 5

Prof. Peter Bermel

August 29, 2012

# Recap from Monday

## Kirchoff's Current Law (KCL)

- Sum of all currents entering a node or Gaussian surface is zero at all times:

$$\sum_{k=1}^{N} I_k(t) = 0\,, \text{for all t}$$

## Kirchoff's Voltage Law (KVL)

- Voltage drop between any two nodes is direction-dependent and path-independent (i.e., $V_{AB} = V_A - V_B$ )
- Sum of voltage drops over any closed loop is zero

# Gaussian Surfaces

- Hypothetical surface through which sum of currents must always be zero
- Clever choice of Gaussian surface can vastly simplify problem
- Example:

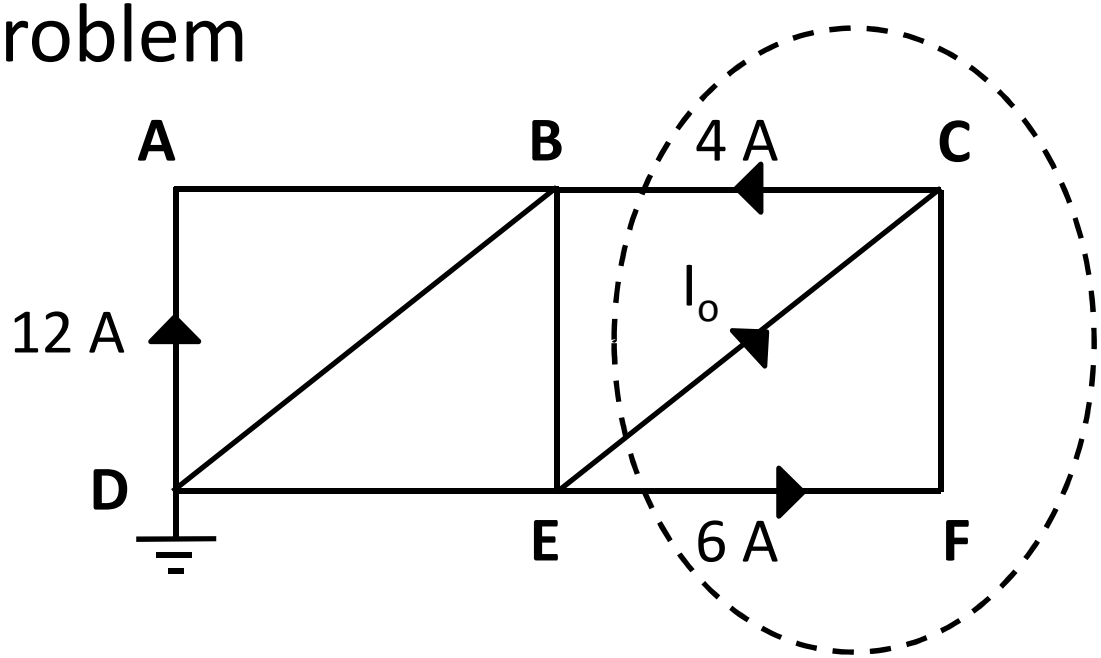

# Series Resistive Circuits

- Calculate the effective resistance of *N* resistors in series:

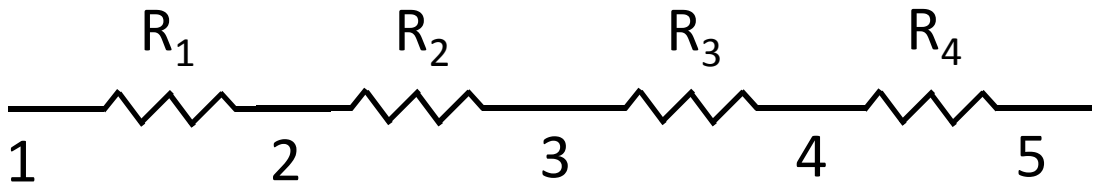


- According to KVL:

$$V_{N+1,1} = \sum_{l=1}^{N} V_{l+1,l}$$

$$IR_{eq} = \sum_{l=1}^{N} IR_l$$

$$R_{eq} = \sum_{l=1}^{N} R_l$$

# Series Resistive Circuits

- Calculate the power dissipated by *N* resistors in series
  - For each element:

$$P_k = I^2 R_k$$

  - For the circuit as a whole:

$$P = \sum_{l=1}^{N} I^2 R_l = I^2 \sum_{l=1}^{N} R_l$$

$$P = I^2 R_{eq}$$

# Parallel Resistive Circuits

- Given a current source $I_o$ connected to *N* parallel resistors, what is the equivalent resistance?

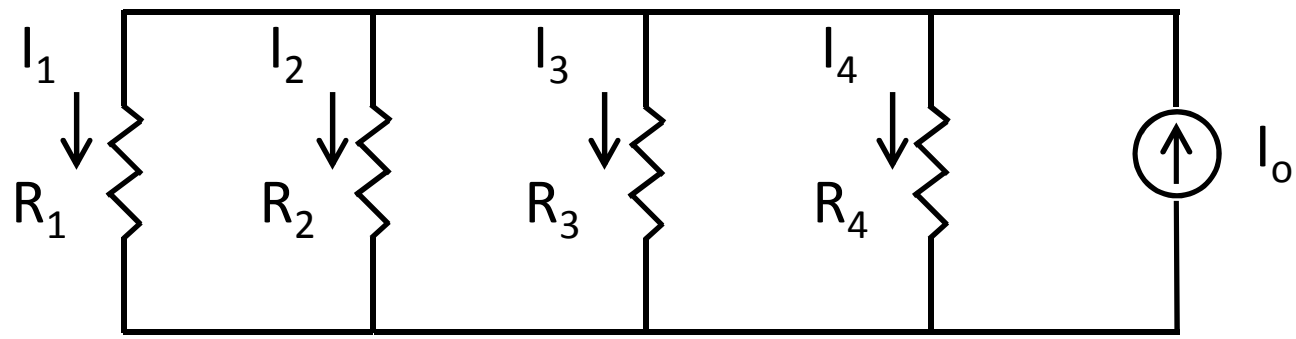


- Equal voltage drop across every resistor implies:

$$V = I_k R_k = I_o R_{eq}$$

- Kirchoff's current law tells us that:

$$I_o = \sum_{l=1}^{N} I_l$$

$$\frac{V}{R_{eq}} = \sum_{l=1}^{N} \frac{V}{R_l}$$

$$G_{eq} = \sum_{l=1}^{N} G_l$$

# Parallel Resistive Circuits

- Calculate the power dissipated by *N* resistors in parallel
  - For each element:

$$P_k = I_k^2 R_k$$

  - For the circuit as a whole:

$$P = \sum_{l=1}^{N} I_l^2 \, R_l = V \sum_{l=1}^{N} I_l$$

$$P = I_o^2 R_{eq}$$

# Series-Parallel Circuits

- Combines features of series and parallel circuits
- Depend on two reference points
- Solve iteratively with previous equations

# Series-Parallel Circuits

- Example:

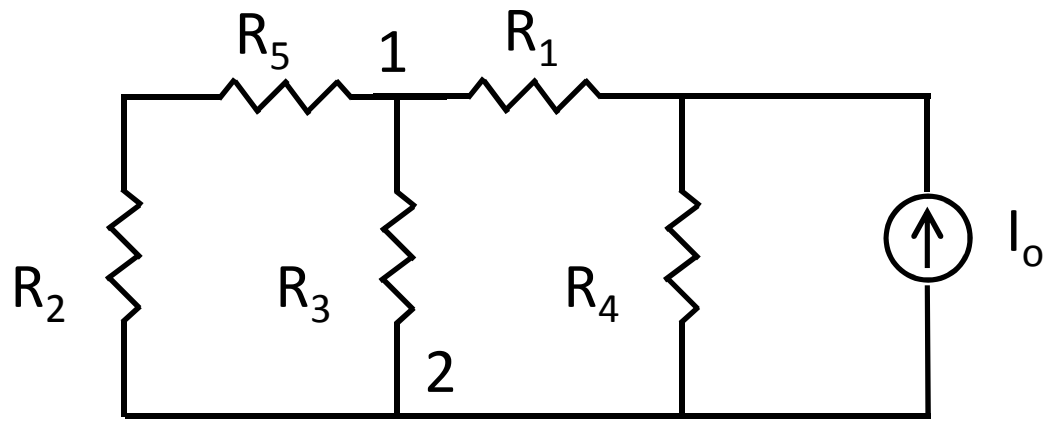


Equivalent resistance across source terminals:

$$\frac{1}{R_{12}} = \frac{1}{R_3} + \frac{1}{R_2 + R_5}$$

$$\frac{1}{R_{eq}} = \frac{1}{R_4} + \frac{1}{R_1 + R_{12}}$$

# Summary

- Series resistors:

$$R_{eq} = \sum R_l$$

$$V_k = VR_k/R_{eq}; \text{ currents equal}$$

- Parallel resistors

$$G_{eq} = \sum G_l$$

$$I_k = IR_{eq}/R_k; \text{ voltages equal}$$

- Series-parallel circuits
  - Analyzed iteratively

# Loading Effect

- Measuring voltage requires using a large but finite resistance
- Example:
  - 1.25 V nominal
  - 1.21 V measured

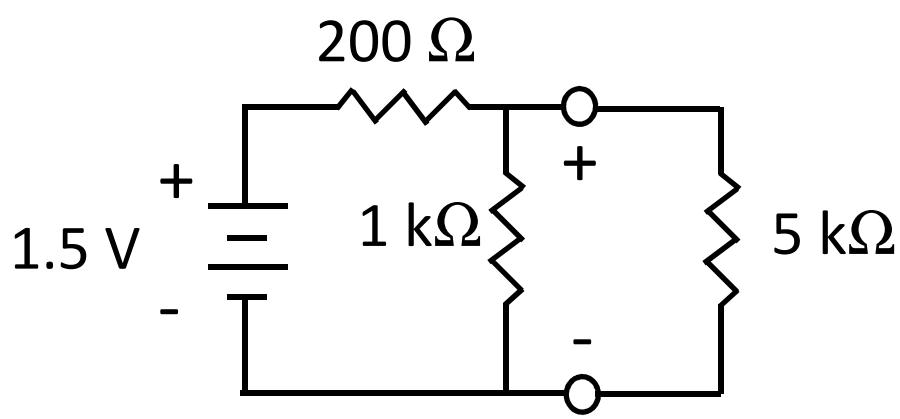

# Internal Resistance

- Internal resistance distinguishes real battery from ideal battery
- Would like internal resistance to be as low as possible
- Example:
  - 1.5 V nominal
  - 1.48 V measured
  - 80 mW heat loss

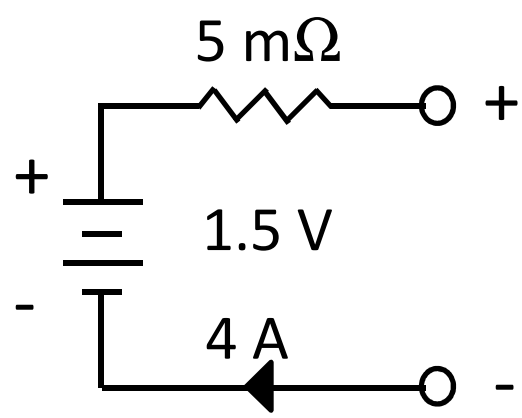

# Internal Resistance

- Another example:
  - Current source
  - 1.5 V load
  - 1 A nominal
  - 0.97 A measured
  - 45 mW heat loss

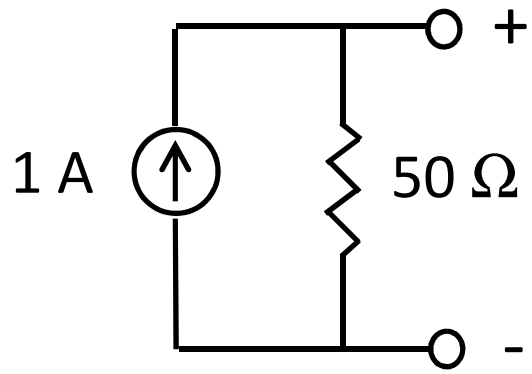

# Voltage Sources

- Ideal voltage source:

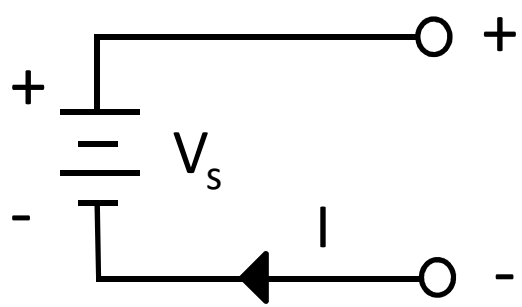


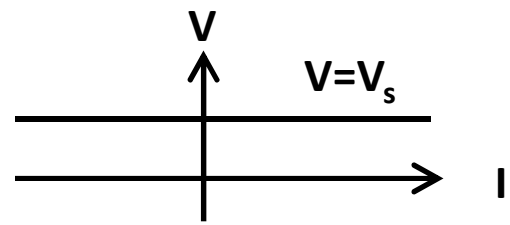


- Non-ideal voltage source:

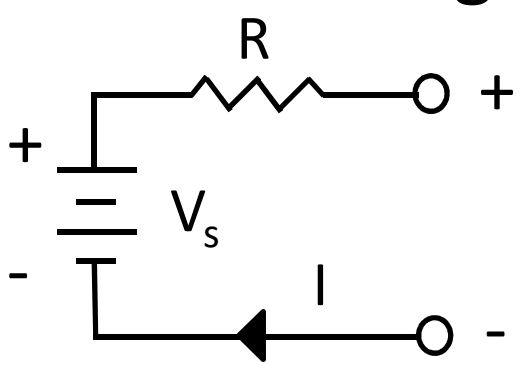


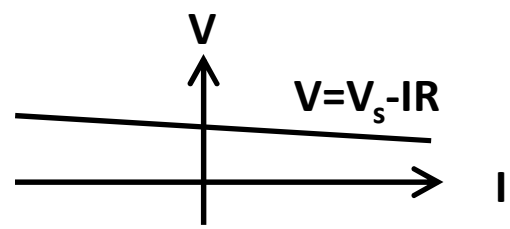


Note: R is generally small

# Ideal Current Sources

- Ideal current source

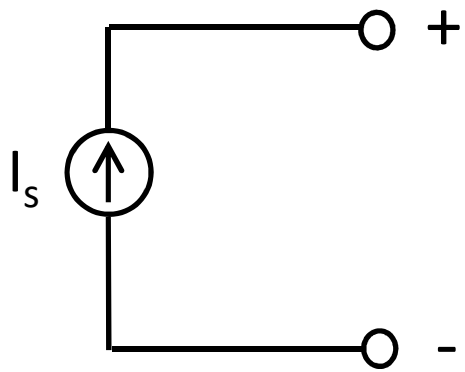


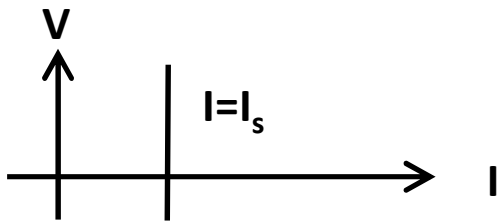


- Non-ideal current source:

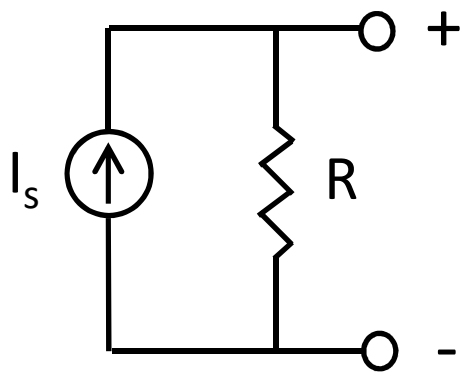


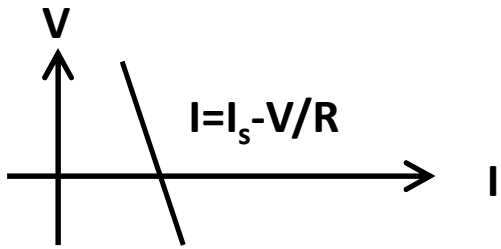


Note: R is generally large

# Homework

- HW #3 solution now posted
- HW #4 due today by 4:30 pm in EE 325B
- HW #5 due Friday: DeCarlo & Lin, Chapter 2:
  - Problem 25
  - Problem 32(b)
  - Problem 35
  - Problem 41