ECE 695
Numerical Simulations
Lecture 2: Computability and **NP**-hardness

Prof. Peter Bermel

January 11, 2017

Outline

- Overview
- Definitions
- Computing Machines
- Church-Turing Thesis
- Polynomial Time (Class **P**)
- Class **NP**
- Non-deterministic Turing machines
- Reducibility
- Cook-Levin theorem
- Coping with **NP** Hardness

Overview from First Lecture

- Study of the complexity of algorithms
- Based on Turing machines
- Often, one compares algorithms for best scaling in large problems

Alan Turing (from University of Calgary Centenary event)

Definitions

- Algorithm – set of rules for computing a function mapping input data to output
- Specific realizations of computers:
  - Turing machines
  - Lambda calculus
  - μ-recursive functions
  - Register machines
- Running time – number of basic operations required
- Efficient computability

Turing Machine

- Performs the following elementary operations:
  - Read a bit of input and byte of data from ‘work’
  - Write a bit to ‘work’
  - Choose next state *Q.* Either:
    - Stop and output a 0 or 1
    - Choose a new rule to apply next

$$\delta : Q \times \Gamma^k \rightarrow Q \times \Gamma^{k-1} \times \{\mathrm{L}, \mathrm{S}, \mathrm{R}\}^k$$

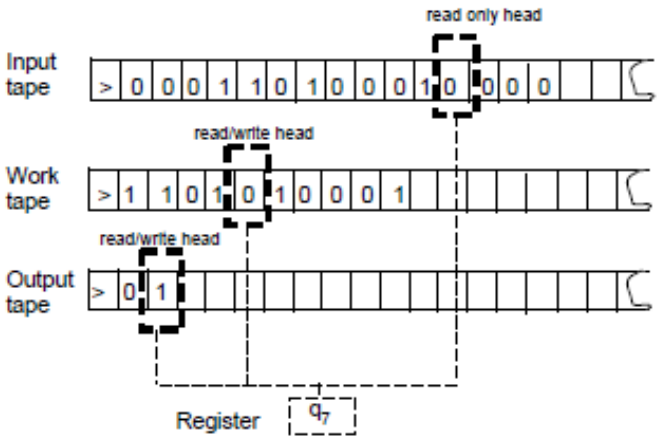

Turing Machine: Behavior in Each State

- q_{start}: write start symbol, change state to q_{copy}
- q_{copy}: copy non-blank symbol, otherwise go to q_{right}
- q_{right}: go back to start, then q_{test}
- q_{test}: if at start and 'work' is blank, write 1; else, write 0
- q_{halt}: finished

Time Constructible Functions

- A function T: $\mathbb{N} \rightarrow \mathbb{N}$ is time constructible iff
  - $T(n) \geq n$
  - TM M computes $x \rightarrow \mathrm{T}(x)$ in time $\mathrm{T}(n)$
- Examples: n, $n \log n$, 2^n

Turing Machine: Key Properties

- If f is computable in $\mathrm{T}(n)$….
  - with alphabet Γ, it is computable in 4 log Γ $\mathrm{T}(n)$ with TM
  - with k tapes, it's computable in $5k\mathrm{T}(n)^2$ with TM
  - with bidirectional tape, computable in $4\mathrm{T}(n)$ with TM

Universal Turing Machines

- A universal Turing machine can simulate every other TM
- Efficient process: takes $CN \log N$ time to simulate a process taking N steps

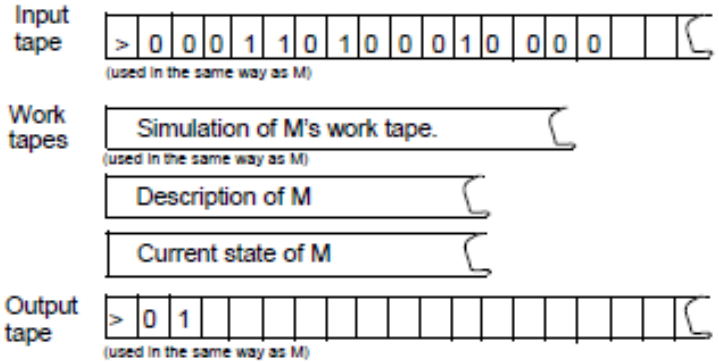

Other Computing Machines

- Register machines
  - Post-Turing machine: adds jump and erase functions
  - Many other variations, getting closer to assembly language
- Lambda calculus – basis for Scheme and LISP
- μ-recursive functions – partial functions mapping $\mathbb{N} \rightarrow \mathbb{N}$
- Which one should we use, in which situations?

Church-Turing (CT) Thesis

"Every physically realizable computing machine can be simulated by a Turing machine, or any other type of machine."

- This thesis has not been rigorously proven
- Not applicable for non-deterministic systems
- Quantum computers have caused some to re-evaluate CT thesis

Uncomputability

- It may seem obvious everything is computable with enough time, but…
- There's always an uncomputable function UC
- Another example: the halting problem
  - Computes whether another function will finish
  - *Cannot be computed in general*

Big-Oh Notation

- Take two functions f, g mapping $\mathbb{N} \to \mathbb{N}$, there exists a constant c s.t. $f(n) \leq c \cdot g(n)$
  - Sometimes write $f(n) = \mathcal{O}(g(n))$
- Examples
  - If $f(n) = 100n^2 + 24n + 2\log n$ and $g(n) = n^2$, then $f = \mathcal{O}(g)$
  - If $f(n) = e^n$ and $g(n) = n^c$ for every c in $\mathbb{N}$, then $g = \mathcal{O}(f)$

Polynomial Complexity

- Meant to capture decision problems that are feasible
- Might think of efficient computations as being $\mathcal{O}(N)$ or $\mathcal{O}(N^2)$
- Often symbolized by **P**
- Formally, $\mathbf{P} = \cup_{c \geq 1} \mathbf{DTIME}(n^c)$, where **DTIME**(T) is computable in $c\mathrm{T}(n)$ time
- Strong form of CT thesis says all simulations can be done with **P** overhead

Other Classes

- Turing machines with randomness – class BPP
- Quantum computers – class BQP

Examples

- CONNECTED – the set of all connected graphs
- TRIANGLEFREE – the set of all graphs without a triangle
- BIPARTITE – the set of all bipartite (distinct) graphs
- TREE – the set of all trees

Summary

- Church-Turing thesis used to demonstrate demonstrate several models of computation:
  - Turing machines
  - Register machines
  - Lambda calculus
- Big-oh notation example: **DTIME**$(n^2) = \mathcal{O}(n^2)$
- Polynomial complexity: $\mathbf{P} = \cup_{c \geq 1} \mathbf{DTIME}(n^c)$,

Class **NP** Definition

- Decision problems that can be efficiently *verified*
- The language L subset {0,1}* is in **NP** if there exists a polynomial p: $\mathbb{N} \to \mathbb{N}$ and a polynomial time TM M s.t. for every x:
  - $x \in L \Leftrightarrow \exists u \in \{0,1\}^{p(|x|)}$
- If $x \in L$ and $u \in \{0,1\}^{p(|x|)}$ satisfies $M(x,u) = 1$, then u is a **certificate** for x

Examples of **NP**

- Independent set – find a *k*-size subset of a given graph *G*'s vertices
- Traveling salesman – given a set of *n* nodes and pairwise distances, find a closed circuit that visits every node once of length no more than *k*
- Linear/integer programming – given a set of m linear inequalities for n variables, find a set of rational/integer solutions
- Graph isomorphism – given two $n \times n$ adjacency matrices M_1 and M_2, decide if they define the same graph
- Composite numbers – decide if number *N* is prime
- Factoring – for a number *N*, find a factor *M* in the interval [*L*,*U*]

Relationship of **P** & **NP**

- **P** is a subset of **NP**
- Formally, $\mathbf{P} \subseteq \mathbf{NP} \subseteq \cup_{c \geq 1} \mathbf{DTIME}\left(2^{n^c}\right)$
- Recall **DTIME**(T) is computable in $c\mathrm{T}(n)$ time

Relationship of **P** & **NP**

- Key open question: does **P**=**NP**?
- Some **NP** problems are in **P**:
  - Connectivity – breadth-first search
  - Composite numbers – Agrawal, Kayal, and Saxena solved this a few years ago
  - Linear programming – ellipsoidal algorithm of Khachiyan

Relationship of **P** & **NP**

- Problems *not* shown to be in **P**:
  - Independent set
  - Traveling salesman
  - Subset sum
  - Integer programming
- This general group is known as **NP** complete: i.e., not in **P** unless **P**=**NP**

Non-deterministic Turing machines

- Has two transition functions δ_0 and δ_1
- The NDTM has another internal state, q_{accept}
- M outputs 1 if some (non-deterministic) sequence of choices → q_{accept}
- Can also define **NTIME** s.t. NDTM takes $c\mathrm{T}(n)$ time $\forall x \in L \Leftrightarrow M(x) = 1$
- Alternative definition: $\mathbf{NP} = \bigcup_{c \in \mathbb{N}} \mathbf{NTIME}(n^c)$

Reducibility

- Karp reductions relate the various example problems to one another
- Language *A* reduces to *B* if there is a polynomial-time computable function *f,* s.t. $\forall x \in \{0,1\}^*, x \in A$ iff $f(x) \in B$
- B is **NP**-hard if $A \leq_p B, \ \forall A \in \mathbf{NP}$

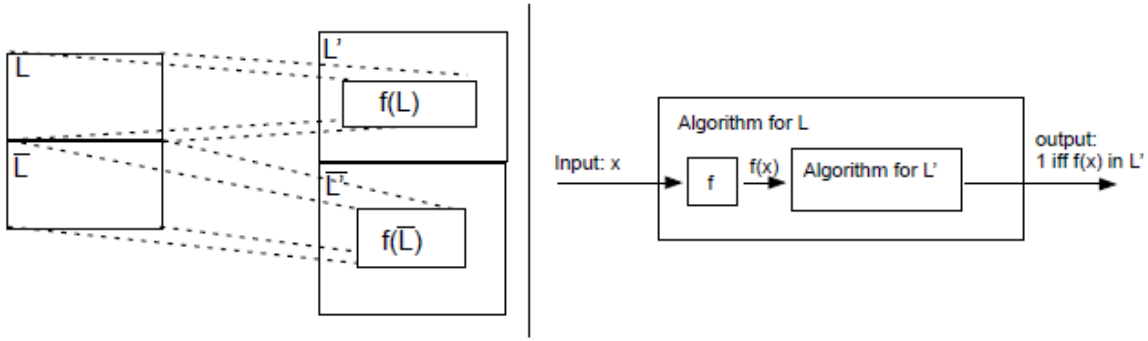

NP completeness

- By transitivity of Karp reduction, there should be a language that's "hardest," known as **NP**-complete
- The TMSAT language is **NP**-complete
  - $TMSAT = \{\langle \alpha, x, 1^n, 1^t \rangle : \exists u \in \{0,1\}^n\}$
  - M_α denotes TM represented by α
  - M_α outputs 1 on $\langle x, u \rangle$

Cook-Levin theorem

- CNF: conjunctive normal form used for a Boolean formula consisting of AND's and OR's
- kCNF: CNF consisting of k AND's: $\bigwedge_{i=1}^{k}\left(\bigvee_j v_{ij}\right)$
- Cook-Levin Theorem:
  - Let SAT be the language of all satisfiable CNF formulae: SAT is NP-complete
  - Let 3SAT be the language of all satisfiable 3CNF formulae: 3SAT is NP-complete

Web of reductions

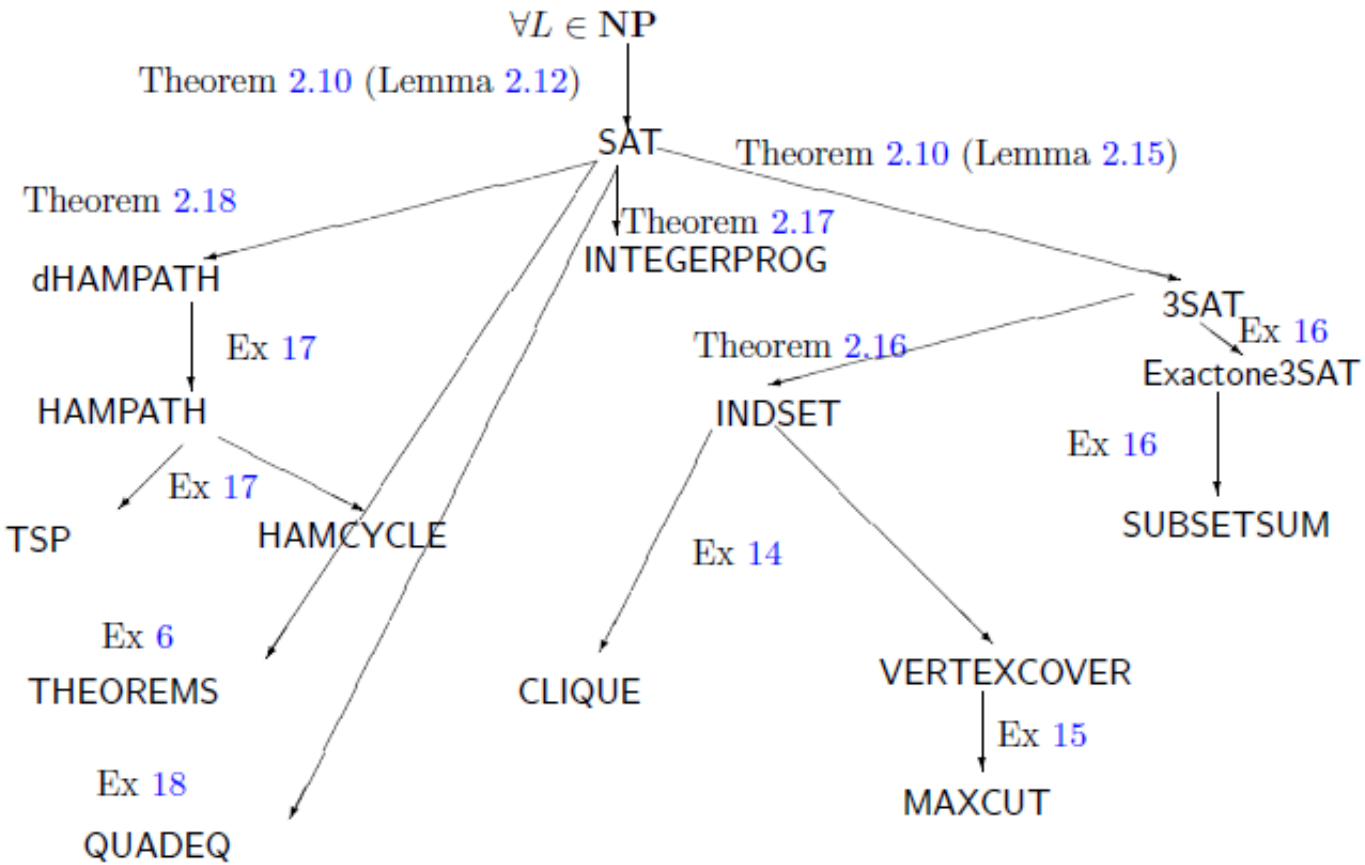

Coping with **NP**-hardness

- Approximate/heuristic solutions
- Example: traveling salesman
- Key considerations:
  - Maximum error
  - Average-case complexity

Related Complexity Classes

- coNP – $x \in L \iff \forall u \in \{0,1\}^{p(|x|)}$ s.t. M(x,u)=1
- EXP = $\cup_{c \geq 0} \mathbf{DTIME}\left(2^{n^c}\right)$
- NEXP= $\cup_{c \geq 0} \mathbf{NTIME}\left(2^{n^c}\right)$
- Must have $\mathbf{P} \subseteq \mathbf{NP} \subseteq \mathbf{EXP} \subseteq \mathbf{NEXP}$

What if **P=NP**?

- Any decision (or equivalently, search) problem could be solved in a reasonable amount of time
- Perfectly optimal designs for all areas of engineering could be chosen
- Automated theory generation for experimental results
- No privacy in the digital domain

Next Class

- Discussion of methods for assessing code performance
- This will include some realistic examples