Sum Capacity of General Deterministic Interference Channel with Channel Output Feedback

Achaleshwar Sahai
Department of ECE,
Rice University,
Houston, TX 77005.
as27@rice.edu

Vaneet Aggarwal
Department of ELE,
Princeton University,
Princeton, NJ 08544.
vaggarwa@princeton.edu

Melda Yüksel
Department of EEE,
TOBB University of
Economics and Technology,
Ankara, Turkey.
yuksel@etu.edu.tr

Ashutosh Sabharwal
Department of ECE,
Rice University,
Houston, TX 77005.
ashu@rice.edu

***Abstract*—In a two-user interference channel, there are four possible feedback paths – two from each receiver to the transmitters. This leads to 16 possible models of feedback. In this paper, we derive the sum capacity of two user deterministic interference channel for all sixteen cases. We find that whenever any of the direct link feedback from a receiver to its own transmitter is present, the sum-capacity is the same as when all four feedback links are present. Further when no direct link feedback is present, the sum capacity with one cross-link feedback and two cross-links of feedback is the same. This sum-capacity is the same as the sum-capacity when there is no feedback *except* in the regime of interference in which both interfering links are weaker than both the direct-links in which case the sum-capacity is the same as sum-capacity of the feedback model with all four feedback links.**

I. Introduction

Feedback is an integral part of any communication design. While output feedback does not improve the capacity of a point-to-point memoryless channel, feedback is known to increase the capacity region is many multi-terminal problems. For instance, it was shown [1] that feedback increases the capacity region of multiple access channel. In [3], feedback was proven to increase the capacity region of the broadcast channel., it was shown in [3] that, feedback enlarges the capacity region. For both channels, multiple access and broadcast, it was shown in [2] and [4] respectively, that a larger capacity region can also be achieved with only a single feedback link.

In a two-user interference channel, most of the work with feedback is limited to the conventional feedback model where there are two links of feedback, one from each receiver to their own transmitter [5, 7, 11]. In this model, it has been shown that feedback helps in mitigating interference. In an IC, however, more complex feedback models might arise out of asymmetric allocation of feedback resources. For instance, two mobiles stations in neighboring cells may be at different distances from their respective base-stations and it is therefore likely that one of the mobile stations has access to feedback while the other does not. The impact of feedback in several such scenarios (due to presence/absence of possible feedback links between the receivers and transmitters) is incomplete if only the conventional feedback model is considered. In this paper, we find the sum-capacity of *all* the sixteen models of feedback possible for a general deterministic interference channel (deterministic channel model was proposed as an abstraction to the Gaussian channel model in [8]). In [10], we derived the sum-capacity for the symmetric IC. In this paper, we complete the picture by analyzing the *general* deterministic IC for *all* feedback models. Although, the capacity region for a general deterministic IC in conventional feedback setup is explored in [11], this paper will focus on deriving, comparing and contrasting all the 16 feedback models possible in an interference channel.

We find that it is sufficient to use two expressions to describe the results of all the sixteen feedback scenarios. The first is the sum-capacity when there is no feedback [9]. The second is the sum-capacity when all the four feedback links are present which is also characterized in this paper. All the sixteen cases result in the sum-capacity either being the same as when there is no feedback or when all four links of feedback are present. We also find that there are certain regimes when the sum-capacity of the four-link feedback model is the same as that when there is no feedback. We find that the model with four feedback links achieves the same sum capacity as that with no feedback unless when either both the direct links are stronger than the interfering links or when both the interfering links are stronger than the direct links.

When there is at-least one feedback link between a transmitter and its intended receiver, the sum capacity is identical to the case with all four feedback links. Further when there is no direct-link of feedback, one cross-link of feedback results in the same sum-capacity as two cross-links of feedback. This sum-capacity is equal to the sum-capacity of the four link feedback model when interfering signals are weaker compared to the strength of the intended signals, and is equal to the sum-capacity *without* feedback otherwise.

The improvement in the sum capacity is due to two reasons. First of all, when the interfering signal is weaker than the intended signal strength, the transmitter which receives feedback (say T_1) can help its intended receiver (say D_1) handle larger interference. The transmission strategy first allows more interference at D_1 from the other transmitter (say T_2) and then resolves it in the following blocks of transmission by using the

suitably designed signal received from T_1. These messages are so designed that a part of them have already been decoded at D_2 and therefore do not cause interference while helping D_1 to decode better. Thus a higher sum-capacity is achieved both when direct or cross-link feedback is available in the weak interference regime. The second reason is that feedback creates an alternate independent path for communicating the message of the other source-destination pair, in the regime where interference is stronger than both the direct signal strength. Here, the sources utilize the strong interfering links to route meaningful data to their own receiver. Single direct-link feedback model has an independent path and thus achieves the same sum-capacity as the four-link feedback model. The cross-link feedback model lacks the independent path and therefore observes no improvement in sum-capacity.

The rest of the paper is organized as follows. Section II gives channel and feedback models. Section III presents the two main results of the paper. Section IV concludes the paper with some remarks on the results.

II. Channel Model and Preliminaries

In this section we describe the *deterministic interference channel* model and the feedback models that will be used throughout the paper. The deterministic IC model used here was first developed in [8] and falls into the class of deterministic IC introduced by [6].

A. Deterministic IC

A deterministic IC consists of two source-destination (transmitter-receiver) pairs. Each receiver receives a signal from its intended transmitter interfered with the signal from the other transmitter. Let the kth transmitter and its intended receiver be denoted as T_k and D_k respectively, where $k \in 1, 2$. The inputs at k^{th} transmitter at time $j = \{1, 2, \dots N\}$ can be written as $X_{kj} = \left[X_{kj_1}\ X_{kj_2}\ \dots X_{kj_q}\right]^T$ such that X_{kj_1} and X_{kj_q} are the most and the least significant bits respectively. The received signal at the uth receiver, $u \in 1, 2$ at time j is denoted by the vector $Y_{uj} = \left[Y_{uj_1}\ Y_{uj_2}\ \dots\ Y_{uj_q}\right]^T$. The communication link between T_k and D_u is described by $n_{ku} \in \mathbb{Z}^*$, where n_{ku} is the number of bit levels of X_{kj} observed at D_u. The maximum levels supported by any link is $l = \max_{u,k}(n_{ku})$. The received signal Y_{uj} of the deterministic IC is given by

$$Y_{uj} = \mathbf{S}^{l-n_{1u}} X_{1j} \oplus \mathbf{S}^{l-n_{2u}} X_{2j} \quad u = 1, 2, \tag{1}$$

where $\oplus$ denotes the XOR operation, and $\mathbf{S}^{l-n_{ku}}$ is a $l \times l$ shift matrix with entries from $GF(2)$ such that $S_{r,c} = 1$ if $r = (l - n_{ku} + c)$ and 0 otherwise. The interference due to the first source at the second receiver at the jth time instant is denoted by $V_{1j} = \mathbf{S}^{q-n_{12}} X_{2j}$ and that due to the second transmitter at the first receiver is $V_{2j} = \mathbf{S}^{q-n_{21}} X_{1j}$.

The message set $\mathcal{W}_k$ is the set of all possible messages to be transmitted from the transmitter T_k to the receiver D_k such that $\mathcal{W}_k = \{1, 2, \dots\dots, 2^{NR_k}\}$, where $N \in \mathbb{N}$ is the number of successive transmissions and $R_k \in \mathbb{R}$ is the rate of transmission. Let the message to be transmitted be $s_k \in \mathcal{W}_k$ and the encoding function $f_{kj} : s_k \mapsto X_{kj}$ at the jth time instant. Let $X_k^N = [X_{k1}, X_{k2}, \dots X_{kN}]$. The received symbol at the uth receiver at the end of N transmissions is denoted by $Y_u^N = [Y_{u1}, Y_{u2}, \dots, Y_{uN}]$. The decoding function $g_u : Y_u^N \mapsto \hat{s}_u$, where $\hat{s}_u \in \mathcal{W}_u$.

B. Feedback Models

One of the main result is that only three feedback models are required to characterize all 16 cases. The three models are described as follows and differ in the sense that encoding functions at the sources varies according to the availability of feedback.

1) **Four-link Feedback:** In this model, both the sources T_1 and T_2 receive channel output feedback from both the receivers. The encoding at k^{th} transmitter at time instant j is given as:

$$X_{kj} = f_{kj}(s_k, Y_1^{j-1}, Y_2^{j-1})$$

2) **Single Direct-Link Feedback:** In this model only one of the sources, T_1, receives channel output feedback from its intended receiver D_1, while the other source, T_2 is devoid of any feedback. The encoding is given by:

$$X_{1j} = f_{1j}(s_1, Y_1^{j-1}); \quad X_{2j} = f_{2j}(s_2)$$

3) **Single Cross-Link Feedback:** In this model, one of sources, T_1, receives channel output feedback from the receiver it interferes with, i.e. D_2. Thus the feedback is along a cross-link. The encoding can therefore be described as:

$$X_{1j} = f_{1j}(s_1, Y_2^{j-1}); \quad X_{2j} = f_{2j}(s_2)$$

C. Sum-Capacity

Probability of error is defined as $\lambda_k = \Pr(s_k \neq \hat{s}_k)$. The capacity region $\mathcal{C}$ is defined as the set of all rate two-tuples (R_1, R_2) such that for $(R_1, R_2) \in \mathcal{C}$, the probability of error

$$\lambda = \max_{k=1,2} \max_{s_k \in \mathcal{W}_k} \Pr(s_k \neq \hat{s}_k)$$

goes to 0 as $N \to \infty$. Let $\mathcal{C}^{(4)}$, $\mathcal{C}^{(1d)}$, $\mathcal{C}^{(1c)}$, $\mathcal{C}^{(*)}$ denote the respective capacity regions of four-link, single direct-link, single cross-link and no feedback models. The sum-capacity of the capacity region $\mathcal{C}$ is denoted by C_{sum} and is given by

$$C_{sum} = \sup(R_1 + R_2 : (R_1, R_2) \in \mathcal{C}) \tag{2}$$

The $C_{sum}^{(4)}$, $C_{sum}^{(1d)}$, $C_{sum}^{(1c)}$, $C_{sum}^{(*)}$ denote the sum-capacity of the four-link, single direct-link, single cross-link and no feedback IC models.

III. Sum-Capacity for all feedback models

In this section, the first theorem describes the equivalence of the sum-capacity of the four-link feedback model and the single direct-link feedback model. The second theorem enunciates the regimes of interference where single cross-link feedback model has the same sum-capacity as the four-link feedback model, and where single cross-link feedback is as good as having no feedback.

Theorem 1. *The sum-capacity of the deterministic IC with four link feedback, $C_{sum}^{(4)}$, is equal to the sum-capacity of the single direct-link feedback model, $C_{sum}^{(1d)}$ and is given by*

$$\begin{aligned} C_{sum}^{(4)} = C_{sum}^{(1d)} \quad = \quad & \min\{(n_{11} - n_{12})^+ + \max(n_{22}, n_{12}), \\ & (n_{22} - n_{21})^+ + \max(n_{11}, n_{21})\}. \end{aligned} \tag{3}$$

Proof: We find the converse for the four link feedback model and achievability for the single direct-link feedback model which would prove the result.

An upper bound on the sum-capacity of the four-link feedback model is given by [10]

$$C_{sum}^{(4)} \quad \leq \quad H(Y_1|V_1,V_2)+H(Y_2). \tag{4}$$

Equivalently the sum-capacity is upper-bounded by

$$C_{sum}^{(4)} \quad \leq \quad H(Y_2|V_1,V_2)+H(Y_1). \tag{5}$$

Thus, the sum-capacity is bounded above by the minimum of the two expressions which give the outer bound as in the statement of the theorem.

For an achievable strategy of single direct-link feedback, we consider five regimes which are denoted by $\mathcal{R}_i$, where $i \in \{1,2,\ldots 5\}$. Each of the regimes is a subspace of $\mathbb{Z}^{*4}$, i.e. $\mathcal{R}_i \subset \mathbb{Z}^{*4}$ such that $\bigcup_{i\in 1,\ldots 5}\mathcal{R}_i = \mathbb{Z}^{*4}$, where $\mathbb{Z}^* = \mathbb{Z}^+ \cup \{0\}$ and $\mathbb{Z}^{*4}$ is the space in which the 4-tuple $\mathbf{n} = (n_{11}, n_{22}, n_{12}, n_{21})$ reside. In what follows we define each of the five regimes precisely and describe the achievability in those regimes.

(Regime 1) $\mathcal{R}_1 = \{\mathbf{n} : \max(n_{12}, n_{21}) \leq \min(n_{11}, n_{22})\}$

The upper-bound in this regime is $(n_{11} + n_{22} - \max(n_{12}, n_{21}))$. Let the number of blocks of transmission be B. The strategy in B blocks can be described as follows.

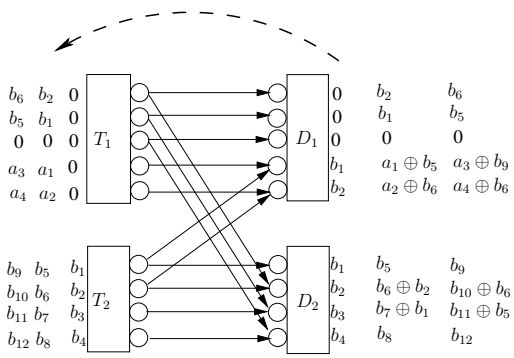

Fig. 1. Achievability in regime 1 for the single direct link feedback. Feedback link is between D_1 and T_1. $n_{11} = 5; n_{22} = 4; n_{12} = 3; n_{21} = 2$. The dashed arrow indicates feedback link.

1st *Block:* The $X_{11_q} = 0, \forall q \in \{1,2,\ldots n_{11}\}$. The second transmitter is populated with n_{22} i.i.d. (independently and identically distributed) data bits, i.e. each of the n_{22} bits of the second transmitter that is observed at the second receiver is populated with an i.i.d. data bit. In the subsequent blocks the following transmission strategy is used

j^{th} *Block,* $2 \leq j \leq B$:

$$X_{1j_q} = \begin{cases} X_{2j-1_{n_{22}+1-q}} & \text{if } 1 \leq q \leq \min(n_{12}, n_{21}) \\ 0 & \text{if } \min(n_{12}, n_{21}) \leq q \\ & \leq \max(n_{12}, n_{21}) \\ \text{i.i.d data} & \text{if } \max(n_{12}, n_{21}) < q \leq n_{11} \end{cases} \tag{6}$$

All the n_{22} bits of the transmitted message X_{2j} are populated with n_{22} i.i.d. data bits. In the Bth block, however, second transmitter remains silent, or equivalently $X_{2B_q} = 0, \forall q \in \{1,2,\ldots n_{22}\}$. The achievability for the case when $(n_{11} = 5, n_{22} = 4, n_{12} = 3, n_{21} = 2)$ has been depicted in Fig. 1.

Decoding: The feasibility of decoding the sent messages at the second receiver is studied first. Note that, in any transmission block the most significant $\max(n_{12}, n_{21}) \geq n_{12}$ bits of the transmitted vector X_{1i} are either a subset of the bits of X_{2j-1} or 0. Moreover, at the end of the first block $Y_{21} = X_{21}$, which implies that the transmitted message X_{21} is decoded completely at the end of the first block itself. In any future block the interference is due to a subset of bits which have already been received and can therefore be subtracted out (forward decoding). At the second receiver, the transmitted message X_{2j} can therefore be extracted out of the received messages Y_{2j}.

At the first receiver we employ a procedure of block by block backward decoding. Note, that from the jth block ($j > 1$), the first transmitter transmits i.i.d. data on the least significant $(n_{11} - \max(n_{12}, n_{21}))$ bits. The lower n_{21} bits of received message Y_{1j} have interference. Thus any message transmitted on the more significant $(n_{11} - n_{12})$ bits is received without interference. The more significant $(n_{11} - \max(n_{12}, n_{21}))$ bits of X_{1j} are those those bits of X_{2j-1} which had interfered with the lesser significant $(n_{11} - \max(n_{12}, n_{21}))$, bits of X_{1j-1}. Since the interfering bits of the $(j-1)^{\text{th}}$ block are available without the interference at the end of jth block, they can be used to decode out the intended message in the previous block (backward decoding). The illustration in Fig. 1 assists better understanding.

The average number of data bits that were transmitted in B blocks, as $B \to \infty$, together by the first and the second source is denoted by $R_{sum}^{(1d)}$ and is given by

$$\begin{aligned} R_{sum}^{(1d)} &= \lim_{B\to\infty}\left(1-\frac{1}{B}\right)(n_{11}+n_{22}-\max(n_{12},n_{21})) \\ &= n_{11}+n_{22}-\max(n_{12},n_{21}). \end{aligned} \tag{7}$$

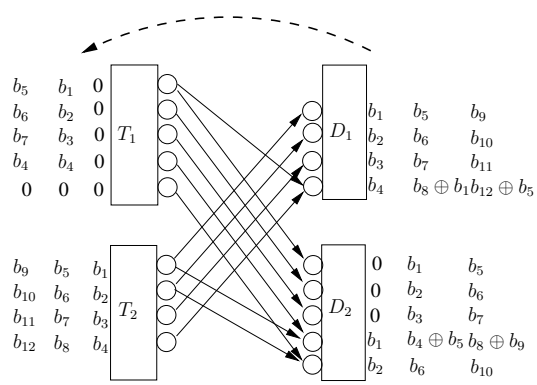

Fig. 2. Three blocks of achievability in regime 2 for the single direct link feedback. $n_{11} = 1; n_{22} = 2; n_{12} = 5; n_{21} = 4$. Notice that as the number of blocks increase, sum-rate approaches 4 bits per channel use.

(Regime 2) $\mathcal{R}_2 = \{\mathbf{n} : \min(n_{12}, n_{21}) > \max(n_{11}, n_{22})\}$

In this regime, both the interfering signal strengths are stronger than the intended signal strength. With the aid of feedback, the cross links can be used to boost up the achievable rate.

1st *Block:* The $X_{11_q} = 0 \; \forall q \in \{1,2,\ldots n_{12}\}$. Essentially, the first transmitter does not transmit anything. The second

transmitter is populated with $\min(n_{12}, n_{21})$ i.i.d data bits. More precisely

$$X_{21_q} = \begin{cases} \text{i.i.d. data} & \text{if } 1 \le q \le \min(n_{12}, n_{21}) \\ 0 & \text{if } \min(n_{12}, n_{21}) \le q \le n_{21} \end{cases}$$

j^{th} *Block,* $2 \le j \le B$*:* Due to feedback, the data transmitted by the second transmitter in the $(j-1)^{\text{th}}$ block is known at the first transmitter before the jth transmission block. The first transmitter acts a relay node, thus boosting up the data rate of the second transmitter-receiver pair. Following is the strategy used for transmission

$$X_{1j_q} = \begin{cases} X_{2j-1_{\min(n_{12},n_{21})+1-q}} & \text{if } 1 \le q \le \min(n_{12}, n_{21}) \\ 0 & \text{if } \min(n_{12}, n_{21}) \le q \le n_{12} \end{cases}$$

The X_{2j_q} = i.i.d. bits if $1 \le q \le \min(n_{12}, n_{21})$ and 0 otherwise. The rate achieved averaged over B blocks of transmission is

$$R_{sum}^{(1d)} = \lim_{B\to\infty} \left(1 - \frac{1}{B}\right) \min(n_{12}, n_{21}) = \min(n_{12}, n_{21}). \quad (8)$$

An example has been depicted in Fig. 2.

Decoding: The first source does not transmit any data of its own. The data it transmits is received at the first receiver via the interfering link. Therefore there are no decoding constraints at the first receiver. During the Bth transmission block, only the first transmitter transmits while the second transmitter remains silent. $X_{1B} = X_{2B-1}$, and therefore $Y_{2B} = X_{2B-1}$. In the jth transmission block, the received message has all the bits of X_{2j-1} summed up with a subset of the bits of X_{2j}. If we apply backward decoding, knowing X_{2j}, from the received message Y_{2j}, the subset of bits of X_{2j} can be subtracted out to decode X_{2j-1} completely. Since, X_{2B-1} is known at the end of the Bth block, backward decoding is feasible. The rate achieved easily matches the upper bound. A modified strategy which allows forward decoding is also possible.

(Regime 3) $\mathcal{R}_3 = \{\mathbf{n} : \max(n_{12}, n_{21}) \ge n_{11}, n_{22} \ge \min(n_{12}, n_{21})\}$

In this regime, one of the interfering links is stronger than the direct links and the other one is weaker. Let $n_{12} = \max(n_{12}, n_{21})$. The sum-capacity is then upper bounded by $\min(n_{12}, n_{11} + n_{22} - n_{21})$. We show that this upper bound can be achieved without the aid of any feedback. Suppose $n_{22} - n_{21} \ge n_{12} - n_{11}$. then we use the following strategy requiring a single block of transmission

$$X_{1j_q} = \begin{cases} \text{i.i.d. data} & \text{if } 1 \le q \le n_{11} \\ X_{1j_{q-n_{11}+n_{12}}} & \text{if } n_{11} < q \le n_{12} \end{cases}$$

and

$$X_{2j_q} = \begin{cases} 0 & \text{if } 1 \le q \le n_{11} + n_{22} - n_{12} \\ \text{i.i.d. data} & \text{if } n_{11} + n_{22} - n_{12} < q \le n_{22} \end{cases}$$

On the other hand, if $n_{12} - n_{11} > n_{22} - n_{21}$, then the following modified strategy at the second transmitter is used

$$X_{2j_q} = \begin{cases} 0 & \text{if } 1 \le q \le n_{21} \\ \text{i.i.d. data} & \text{if } n_{21} < q \le n_{22} \end{cases}$$

Since the presence of feedback is inconsequential, thus the achievability when $n_{21} = \max(n_{12}, n_{21})$ is by simply exchanging the transmission strategies at the two transmitters. The proof of feasibility is omitted due to lack of space.

(Regime 4) $\mathcal{R}_4 = \{\mathbf{n} : \max(n_{11}, n_{22}) \ge \max(n_{12}, n_{21}) \ge \min(n_{11}, n_{22})\}$

In this regime, the upper bound $\max(n_{11}, n_{22})$ can be achieved by the trivial strategy of allowing transmissions *only* from the transmitter with the stronger direct link.

(Regime 5) $\mathcal{R}_5 = \{\mathbf{n} : \max(n_{12}, n_{21}) \ge \max(n_{11}, n_{22}) \ge \min(n_{12}, n_{21}) \ge \min(n_{11}, n_{22})\}$

For the case when $n_{12} \ge n_{11} \ge n_{21} \ge n_{22}$, the upper bound of the sum-capacity is $n_{11} = \min(n_{12}, n_{11})$. It is achievable by allowing transmission of n_{11} i.i.d data bits at the first transmitter while switching off the second transmitter. In the general case the upper bound $\max(n_{11}, n_{22})$ can be achieved with the trivial strategy of letting only the user with stronger direct link to transmit.

Remark 1. *In the strong interference regime, $\mathcal{R}_2$, the gain is due to alternate independent path of communication via the feedback of the other receiver. The communication is constrained by the capacity of the interfering links and the bottleneck is therefore the weaker of the two interfering links. This bottleneck is same for both the four link feedback model as well as the one link feedback model.* ■

Theorem 2. *The sum-capacity of single cross-link feedback model, $C_{sum}^{(1c)}$, is equal to $C_{sum}^{(4)}$, the sum-capacity of four link feedback model when* $\max(n_{12}, n_{21}) \le \min(n_{11}, n_{22})$*, i.e.*

$$C_{sum}^{(1c)} = C_{sum}^{(4)} = n_{11} + n_{22} - \max(n_{12}, n_{21}). \quad (9)$$

and otherwise is equal to sum-capacity with no feedback $C_{sum}^{(*)}$ and is given by

$$C_{sum}^{(1c)} = C_{sum}^{(*)} = \min(n_{12}, n_{21}, n_{11} + n_{22}) \quad (10)$$

Proof: The proof employs ideas from the proof of Theorem 1. We note that $C_{sum}^{(*)} \le C_{sum}^{(1c)} \le C_{sum}^{(4)}$. From the proof of Theorem 1, we know that in regimes $\mathcal{R}_3$, $\mathcal{R}_4$, $\mathcal{R}_5$, the sum-capacity $C_{sum}^{(4)} = C_{sum}^{(*)}$, i.e. sum-capacity of four-link feedback can be achieved without feedback. Therefore, in these regimes of interference, the $C_{sum}^{(1c)} = C_{sum}^{(*)} = C_{sum}^{(4)}$.

The remaining regimes of interest are $\mathcal{R}_1$ and $\mathcal{R}_2$. For $\mathcal{R}_2$, an upper-bound to the sum-capacity is constructed by upper-bounding the sum-capacity of a system model with an additional cross feedback link between D_1 and T_2. Due to the infinite-capacity feedback link, T_1 and T_2 are respectively in cognition of all the received messages at D_2 and D_1 at all time instants. In addition to this, suppose that, the transmitters T_1 and T_2 respectively are connected to D_2 and D_1 via an infinite capacity forward link, thus making nodes T_1 and D_2, and T_2 and D_1 *identical* with respect to the information available at all time instants. The modified system can be reduced to a point-to-point two way full-duplex channel by combining nodes T_1 and D_2 to form a virtual node, say $\mathsf{T}_1\mathsf{D}_2$ and similarly T_2 and D_1 to form $\mathsf{T}_2\mathsf{D}_1$. In a point to point full-duplex two-way channel model, operating the two nodes

independently is known to be optimal [12]. The sum-capacity of this model is $(n_{11} + n_{22})$ is an upper-bound of $C_{sum}^{(1c)}$. Therefore $C_{sum}^{(1c)} \leq (n_{11} + n_{22})$. In regime $\mathcal{R}_2$, another upper bound of $C_{sum}^{(1c)}$ and $C_{sum}^{(4)}$ is $\min(n_{12}, n_{21})$. Together, in $\mathcal{R}_2$, the upper bound of $C_{sum}^{(1c)}$ is $\min(n_{12}, n_{21}, n_{11} + n_{22})$.

Achievability for the regime $\mathcal{R}_2$ follows:

Case 1: $\min(n_{12}, n_{21}) \geq n_{11} + n_{22}$

The upper bound is $(n_{11} + n_{22})$. The achievability uses the following single block strategy

$$X_{11_q} = \begin{cases} \text{i.i.d. data} & \text{if } 1 \leq q \leq n_{11} \\ 0 & \text{if } n_{11} < q \leq n_{12} \end{cases}$$

and

$$X_{21_q} = \begin{cases} \text{i.i.d. data} & \text{if } 1 \leq q \leq n_{22} \\ 0 & \text{if } n_{22} < q \leq n_{21} \end{cases}$$

Rate achieved is $(n_{11} + n_{22})$.

Case 2: $\min(n_{12}, n_{21}) < n_{11} + n_{22}$

The upper bound in this case $\min(n_{12}, n_{21})$. Single block transmission strategy follows:

$$X_{11_q} = \begin{cases} \text{i.i.d. data} & \text{if } 1 \leq q \leq n_{11} \\ 0 & \text{if } n_{11} < q \leq n_{12} \end{cases}$$

and

$$X_{21_q} = \begin{cases} \text{i.i.d. data} & \text{if } p < q \leq n_{22} \\ X_{21_{q+p}} & \text{if } 1 \leq q \leq p \\ 0 & \text{otherwise} \end{cases}$$

where $p = n_{22} + n_{11} - \min(n_{12}, n_{21})$. The rate achieved without feedback is $\min(n_{12}, n_{21})$ equals the upper bound, and since it is achieved without feedback, thus $C_{sum}^{(1c)} = C_{sum}^{(*)}$.

In regime $\mathcal{R}_1$, upper bound is $(n_{11} + n_{22} - \max(n_{12}, n_{21}))$. The strategy used in this case is identical to the strategy employed in regime $\mathcal{R}_1$ of interference for single direct link feedback model and as described by (6). In this model D_2 provides feedback to T_1. Since the source of interfering bits at D_2 is T_1, therefore T_1 can eliminate all the interference from Y_{2i} to decode X_{2i} completely, thus making the strategy possible. The strategy, as viewed by the two receivers is identical to the single direct link case and decoding therefore is feasible. The sum-rate identical to the single direct-link feedback can be achieved which is $(n_{11} + n_{22} - \max(n_{12}, n_{21}))$, which is the upper bound of the four link feedback model too. In this regime therefore $C_{sum}^{(1c)} = C_{sum}^{(4)}$. ■

Corollary 1. *The sum-capacity of the feedback model with feedback only along both the cross-links is same as $C_{sum}^{(1c)}$, the sum capacity of the single cross-link feedback model.*

Proof: Let us denote the sum-capacity of feedback model with feedback along two cross-links as $C_{sum}^{(2c)}$. The proof follows from the fact the in all the regimes, except $\mathcal{R}_2$, $C_{sum}^{(1c)} = C_{sum}^{(4)}$. Since $C_{sum}^{(2c)} \leq C_{sum}^{(4)}$, therefore $C_{sum}^{(1c)} = C_{sum}^{(2c)}$. It follows from the construction of the upper bound of $C_{sum}^{(1c)}$ in proof of Theorem 2 that it is also an upper-bound to the sum-capacity of system model with two cross feedback links, i.e. $C_{sum}^{(2c)}$ and is known to be achievable without feedback in $\mathcal{R}_2$ and hence in $\mathcal{R}_2$ too $C_{sum}^{(1c)} = C_{sum}^{(2c)}$. ■

IV. Discussion and Conclusions

In this paper, we study the impact of increased feedback on sum-capacity. The key conclusion is that more feedback does not necessarily help. In fact, if only one direct path feedback is sufficient to achieve the maximal all-feedback-present capacity. Moreover, even the non-traditional single cross-link feedback model has the same sum-capacity as the four-link model when the interfering links are weaker than both the direct links, i.e. in regime $\mathcal{R}_1$. In the regime $\mathcal{R}_1$, the gain in sum-capacity is due to transmitter with feedback assisting its receiver in handling larger interference while not causing interference to the other receiver. In the regime where the interfering links are much stronger than the direct links, i.e. $\mathcal{R}_2$, the gain in rate to one source-destination pair is due to the presence of an alternate independent path *via the feedback link* of the other source-destination pair. The alternate path invariably contains both the interfering links. The bottleneck in the improvement turns out to be the weaker of the two interfering links which is same irrespective of whether there is four-link feedback or single direct-link feedback, and thus from sum-capacity perspective feedback on all four-links is equivalent to single direct-link feedback. In the cross-link feedback case, however, there is no independent path and the bottleneck continues to be the strength of the direct-link. Thus there is no gain in $\mathcal{R}_2$ with cross-link feedback. In all other regimes, the single direct/cross-link feedback has the same sum-capacity as that of the four-link model. Since all intermediate feedback models too will have either sum-capacity of four-link or no feedback model, this is a complete characterization of the sum-capacity of all 16 different feedback models of a general deterministic IC. The Gaussian extensions are in preparation and will be presented elsewhere.

References

[1] N. Gaarder and J. Wolf, "The capacity region of multiple-access discrete memoryless channel can increase with feedback" *IEEE IT*, 21(1):100-102, Jan'75.

[2] A. Carleial, "Multiple-access channels with different generalized feedback signals," *IEEE Trans. Inf. Th.*, 28(6):841-850, Nov'82.

[3] L. Ozarow and S. Leung-Yan-Cheong, "An achievable region and outer bound for the Gaussian broadcast channel with feedback," *IEEE Trans. Inf. Th.*, 30(4):667-671, Jul'84.

[4] S. R. Bhaskaran, "Broadcasting with feedback," in Proc. *ISIT*, pp. 406-410, Jun 2007, Nice, France.

[5] C. Suh and D. Tse, "Feedback capacity of the Gaussian interference channel to within 1.7075 bits: the symmetric case," *Submitted to IEEE Trans. Inf. Th.*, arXiv:0901.3580v1

[6] M. H. M. Costa and A. El Gamal, "The capacity region of a class of deterministic interference channels," *IEEE IT*, 28(2):343-346, Mar'82.

[7] G. Kramer, "Feedback strategies for white Gaussian interference networks," *IEEE IT*, 48:1423-1438, June'02.

[8] A. S. Avestimehr, S. N. Diggavi, and D. N. C. Tse,"Wireless Network Information Flow: A Deterministic Approach", *submitted to IEEE IT*.

[9] G. Bresler and D. Tse, "The two-user Gaussian interference channel: A deterministic view," *Euro Trans Telecom,* 19(4):333-354, June'08.

[10] A. Sahai, V. Aggarwal, M. Yuksel and A. Sabharwal, "On Channel Output Feedback in Deterministic Interference Channel," *in Proc. ITW*, Toarmina, Italy, October 2009

[11] C. Suh and D. Tse, "The feedback capacity region of El-Gamal deterministic interference channel", *in Proceedings of 47th Annual Allerton Conference on Comm., Control and Computing*, Sept 2009.

[12] T. M. Cover and J. A. Thomas, *Elements of Information Theory*, Wiley Series in Telecommunications and Signal Processing, 2nd edition, 2006